Design and Dimensional Data for EI Laminations

Laminations are still one of the most widely-used cores in power conversion. The dimensional outline for EI laminations and an assembled transformer is shown in Figure 3-22. Dimensional data for EI laminations is given in Table 3-2; design data is given in Table 3-3.

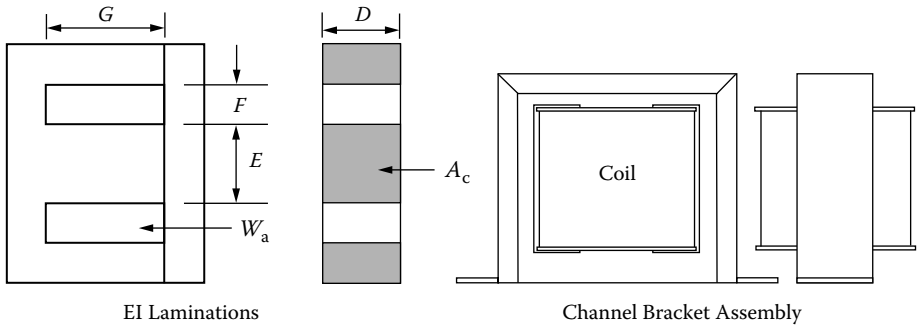

Figure 3-22. EI Lamination Outline.

Table 3-2. Dimensional Data for EI Laminations

EI, Laminations, (Tempel) 14 mil									
Part No.	D cm	E cm	F cm	G cm	Part No.	D cm	E cm	F cm	G cm
EI-375	0.953	0.953	0.794	1.905	EI-112	2.857	2.857	1.429	4.286
EI-021	1.270	1.270	0.794	2.064	EI-125	3.175	3.175	1.588	4.763
EI-625	1.588	1.588	0.794	2.381	EI-138	3.493	3.493	1.746	5.239
EI-750	1.905	1.905	0.953	2.857	EI-150	3.810	3.810	1.905	5.715
EI-875	2.223	2.223	1.111	3.333	EI-175	4.445	4.445	2.223	6.668
EI-100	2.540	2.540	1.270	3.810	EI-225	5.715	5.715	2.858	8.573

Table 3-3. Design Data for 14 mil EI Laminations

EI, Laminations, (Tempel) 14 mil										
Part No.	W_{tcu} grams	W_{tfe} grams	MLT cm	MPL cm	$\frac{W_a}{A_c}$	A_c cm^2	W_a cm^2	A_p cm^4	K_g cm^5	A_t cm^2
EI-375	36.1	47.2	6.7	7.3	1.754	0.862	1.512	1.303	0.067	46.2
EI-021	47.6	94.3	8.2	8.3	1.075	1.523	1.638	2.510	0.188	62.1
EI-625	63.5	170.0	9.5	9.5	0.418	2.394	1.890	4.525	0.459	83.2
EI-750	108.8	296.0	11.2	11.4	0.790	3.448	2.723	9.384	1.153	120.0
EI-875	171.0	457.0	13.0	13.3	0.789	4.693	3.705	17.384	2.513	163.0
EI-100	254.0	676.0	14.8	15.2	0.790	6.129	4.839	29.656	4.927	212.9
EI-112	360.0	976.0	16.5	17.2	0.789	7.757	6.124	47.504	8.920	269.4
EI-125	492.0	1343.0	18.3	19.1	0.789	9.577	7.560	72.404	15.162	333.0
EI-138	653.0	1786.0	20.1	21.0	0.789	11.588	9.148	106.006	24.492	403.0
EI-150	853.0	2334.0	22.0	22.9	0.789	13.790	10.887	150.136	37.579	479.0
EI-175	1348.0	3711.0	25.6	26.7	0.789	18.770	14.818	278.145	81.656	652.0
EI-225	2844.0	7976.0	32.7	34.3	0.789	31.028	24.496	760.064	288.936	1078.0

Downloaded By: 10.3.98.104 At: 00:06 16 Nov 2021; For: 9781439836880, chapter3, 10.1201/b10865-4

© 2011 by Taylor and Francis Group, LLC

Design and Dimensional Data for UI Laminations

The dimensional outline for UI laminations and an assembled transformer is shown in Figure 3-23. Dimensional data for UI laminations is given in Table 3-4; design data is given in Table 3-5.

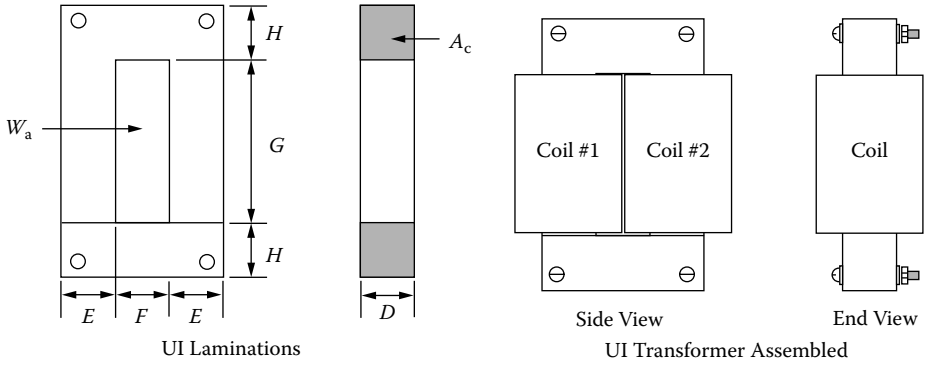

Figure 3-23. UI Lamination Outline.

Table 3-4. Dimensional Data for UI Laminations

UI, Standard Laminations 14 mil											
Part No.	D cm	E cm	F cm	G cm	H cm	Part No.	D cm	E cm	F cm	G cm	H cm
50UI	1.270	1.270	1.270	3.810	1.270	125UI	3.175	3.175	3.175	9.525	3.175
60UI	1.429	1.429	2.223	5.398	1.429	150UI	3.810	3.810	3.810	11.430	3.810
75UI	1.905	1.905	1.905	5.715	1.905	180UI	4.572	4.572	4.572	11.430	4.572
100UI	2.540	2.540	2.540	7.620	2.540	240UI	6.096	6.096	6.096	15.240	6.096

Table 3-5. Design Data for 14 mil UI Laminations

UI, Standard Laminations 14 mil										
Part No.	W_{tcu} grams	W_{tfe} grams	MLT cm	MPL cm	$\frac{W_a}{A_c}$	A_c cm^2	W_a cm^2	A_p cm^4	K_g cm^5	A_t cm^2
50UI	132	173	7.68	15.24	3.159	1.532	4.839	7.414	0.592	110
60UI	418	300	9.81	18.10	6.187	1.939	11.996	23.263	1.839	209
75UI	434	585	11.22	22.86	3.157	3.448	10.887	37.534	4.614	247
100UI	1016	1384	14.76	30.48	3.158	6.129	19.355	118.626	19.709	439
125UI	1967	2725	18.29	38.10	3.158	9.577	30.242	289.614	60.647	685
150UI	3413	4702	22.04	45.72	3.158	13.790	43.548	600.544	150.318	987
180UI	4884	7491	26.28	50.29	2.632	19.858	52.258	1037.740	313.636	1296
240UI	11487	17692	34.77	67.06	2.632	35.303	92.903	3279.770	1331.997	2304

Downloaded By: 10.3.98.104 At: 00:06 16 Nov 2021; For: 9781439836880, chapter3, 10.1201/b10865-4

© 2011 by Taylor and Francis Group, LLC

Design and Dimensional Data for LL Laminations

The dimensional outline for LL laminations and an assembled transformer is shown in Figure 3-24. Dimensional data for LL laminations is given in Table 3-6; design data is given in Table 3-7.

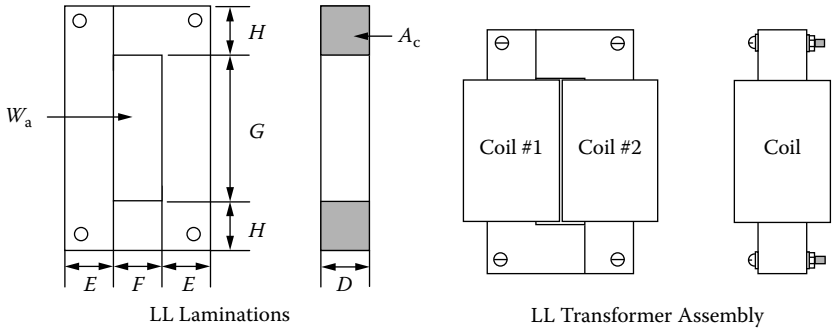

Figure 3-24. LL Lamination Outline.

Table 3-6. Dimensional Data for 14 mil LL Laminations

LL, Standard Laminations 14 mil											
Part No.	D cm	E cm	F cm	G cm	H cm	Part No.	D cm	E cm	F cm	G cm	H cm
141L	0.635	0.635	1.270	2.858	0.635	104L	1.270	1.270	1.984	5.555	1.270
108L	1.031	1.031	0.874	3.334	1.111	105L	1.270	1.270	1.905	6.826	1.270
250L	1.031	1.031	0.874	5.239	1.111	102L	1.429	1.429	1.588	5.398	1.429
101L	1.111	1.111	1.588	2.858	1.111	106L	1.429	1.429	2.223	5.398	1.429
7L	1.270	1.270	1.270	3.810	1.270	107L	1.588	1.588	2.064	6.350	1.588
4L	1.270	1.270	1.905	3.810	1.270						

Table 3-7. Design Data for 14 mil LL Laminations

LL, Standard Laminations 14 mil										
Part No.	W_{tcu} grams	W_{tfe} grams	MLT cm	MPL cm	$\frac{W_a}{A_c}$	A_c cm^2	W_a cm^2	A_p cm^4	K_g cm^5	A_t cm^2
141L	63.8	31.3	4.9	10.8	9.473	0.383	3.629	1.390	0.043	55.2
108L	61.2	97.9	5.9	12.7	2.884	1.010	2.913	2.943	0.201	70.3
250L	96.1	127.1	5.9	16.5	4.532	1.010	4.577	4.624	0.316	92.0
101L	118.5	115.9	7.3	13.3	3.867	1.173	4.536	5.322	0.340	97.3
7L	132.2	173.9	7.7	15.2	3.159	1.532	4.839	7.414	0.592	109.7
4L	224.0	185.2	8.7	16.5	4.737	1.532	7.258	11.121	0.785	141.9
104L	344.9	228.0	8.8	20.2	7.193	1.532	11.020	16.885	1.176	180.2
105L	401.3	256.5	8.7	22.5	8.488	1.532	13.004	19.925	1.407	199.4
102L	268.6	284.1	8.8	19.7	4.419	1.939	8.569	16.617	1.462	167.6
106L	418.6	302.1	9.8	21.0	6.187	1.939	11.996	23.263	1.839	208.8
107L	475.2	409.5	10.2	23.2	5.474	2.394	13.105	31.375	2.946	235.8

Downloaded By: 10.3.98.104 At: 00:06 16 Nov 2021; For: 9781439836880, chapter3, 10.1201/b10865-4

© 2011 by Taylor and Francis Group, LLC

Design and Dimensional Data for DU Laminations

The dimensional outline for DU laminations and an assembled transformer is shown in Figure 3-25. Dimensional data for DU laminations is given in Table 3-8; design data is given in Table 3-9.

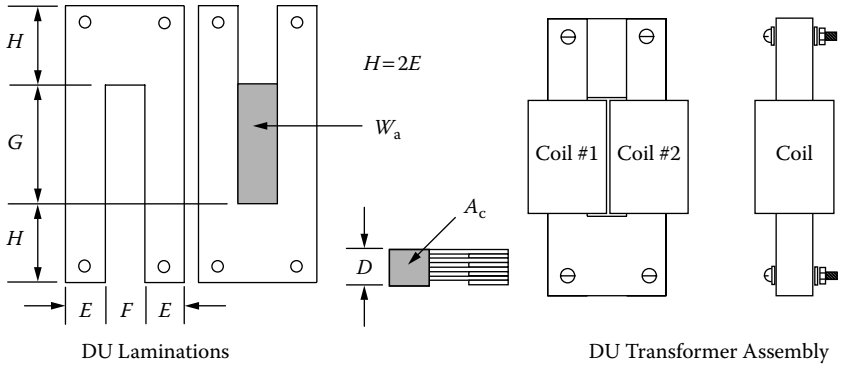

Figure 3-25. DU Lamination Outline.

Table 3-8. Dimensional Data for 14 mil DU Laminations

DU, Standard Laminations 14 mil											
Part No.	D cm	E cm	F cm	G cm	H cm	Part No.	D cm	E cm	F cm	G cm	H cm
DU-63	0.159	0.159	0.318	0.794	0.318	DU-39	0.953	0.953	0.953	2.858	1.905
DU-124	0.318	0.318	0.476	1.191	0.635	DU-37	0.953	0.953	1.905	3.810	1.905
DU-18	0.476	0.476	0.635	1.588	0.953	DU-50	1.270	1.270	2.540	5.080	2.540
DU-26	0.635	0.635	0.635	1.905	1.270	DU-75	1.905	1.905	3.810	7.620	3.810
DU-25	0.635	0.635	0.953	2.064	1.270	DU-1125	2.858	2.858	5.715	11.430	5.715
DU-1	0.635	0.635	0.953	3.810	1.270	DU-125	3.175	3.175	5.080	10.160	6.350

Table 3-9. Design Data for 14 mil DU Laminations

DU, Standard Laminations 14 mil										
Part No.	W_{tcu} grams	W_{tfe} grams	MLT cm	MPL cm	$\frac{W_a}{A_c}$	A_c cm^2	W_a cm^2	A_p cm^4	K_g cm^5	A_t cm^2
DU-63	1.4	0.6	1.5	3.2	10.500	0.024	0.252	0.006	0.00003	4.2
DU-124	4.9	4.3	2.4	5.2	5.906	0.096	0.567	0.054	0.0009	11.8
DU-18	11.9	13.5	3.3	7.3	4.688	0.215	1.008	0.217	0.0057	23.4
DU-26	17.0	28.9	3.9	8.9	3.159	0.383	1.210	0.463	0.0180	33.9
DU-25	31.1	30.4	4.4	9.9	5.133	0.383	1.966	0.753	0.0260	44.3
DU-1	57.3	42.4	4.4	13.3	9.634	0.383	3.630	1.390	0.0479	60.9
DU-39	55.3	104.5	5.7	13.3	3.158	0.862	2.722	2.346	0.1416	76.2
DU-37	186.0	124.5	7.2	17.2	8.420	0.862	7.258	6.256	0.2992	134.3
DU-50	443.9	287.8	9.7	22.8	8.422	1.532	12.903	19.771	1.2524	238.0
DU-75	1467.0	985.2	14.2	34.3	8.420	3.448	29.032	100.091	9.7136	537.1
DU-1125	4880.0	3246.0	21.0	51.4	8.421	7.757	65.322	506.709	74.8302	1208.0
DU-125	3906.0	3966.0	21.3	41.4	5.389	9.577	51.610	494.275	88.9599	1147.0

Downloaded By: 10.3.98.104 At: 00:06 16 Nov 2021; For: 9781439836880, chapter3, 10.1201/b10865-4

© 2011 by Taylor and Francis Group, LLC

Design and Dimensional Data for Three-Phase Laminations

The dimensional outline for 3Phase EI laminations and an assembled transformer is shown in Figure 3-26. Dimensional data for 3Phase EI laminations is given in Table 3-10; design data is given in Table 3-11.

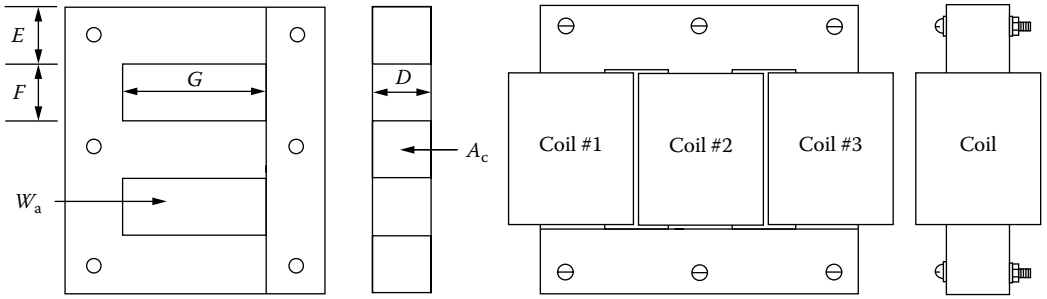

Figure 3-26. EI Three Phase Laminations Outline.

Table 3-10. Dimensional Data for 14 mil EI Three-Phase Laminations

3Phase, Standard Laminations, Thomas & Skinner 14 mil									
Part No.	D cm	E cm	F cm	G cm	Part No.	D cm	E cm	F cm	G cm
0.250EI	0.635	0.635	0.871	2.858	1.000EI	2.540	2.540	3.810	7.620
0.375EI	0.953	0.953	1.270	3.175	1.200EI	3.048	3.048	3.048	7.620
0.500EI	1.270	1.270	1.588	3.493	1.500EI	3.810	3.810	3.810	9.525
0.562EI	1.427	1.427	1.588	5.398	1.800EI	4.572	4.572	4.572	11.430
0.625EI	1.588	1.588	1.984	5.634	2.400EI	6.096	6.096	6.096	15.240
0.875EI	2.223	2.223	2.779	6.111	3.600EI	9.144	9.144	9.144	22.860

Table 3-11. Design Data for 14 mil EI Three Phase Laminations

3Phase, Standard Laminations, Thomas & Skinner 14 mil									
Part No.	W_{tcu} grams	W_{tfe} grams	MLT cm	$\frac{W_a}{2A_c}$	A_c cm^2	W_a cm^2	A_p cm^4	K_g cm^5	A_t cm^2
0.250EI	57	54	4.3	3.251	0.383	2.49	1.43	0.051	53
0.375EI	134	154	6.2	2.339	0.862	4.03	5.21	0.289	102
0.500EI	242	324	8.2	1.810	1.532	5.54	12.74	0.955	159
0.562EI	403	421	8.8	2.213	1.936	8.57	24.88	2.187	207
0.625EI	600	706	10.1	2.334	2.394	11.18	40.13	3.816	275
0.875EI	1255	1743	13.9	1.809	4.693	16.98	119.53	16.187	487
1.000EI	2594	2751	16.7	2.368	6.129	29.03	266.91	39.067	730
1.200EI	2178	3546	17.6	1.316	8.826	23.23	307.48	61.727	725
1.500EI	4266	6957	22.0	1.316	13.790	36.29	750.68	187.898	1132
1.800EI	7326	12017	26.3	1.316	19.858	52.26	1556.61	470.453	1630
2.400EI	17230	28634	34.8	1.316	35.303	92.90	4919.66	1997.995	2899
3.600EI	58144	96805	52.2	1.316	79.432	209.03	24905.75	15174.600	6522

Downloaded By: 10.3.98.104 At: 00:06 16 Nov 2021; For: 9781439836880, chapter3, 10.1201/b10865-4

© 2011 by Taylor and Francis Group, LLC

Design and Dimensional Data for Tape Wound C Cores

The dimensional outline for C cores is shown in Figure 3-27. Dimensional data for C cores is given in Table 3-12; design data is given in Table 3-13.

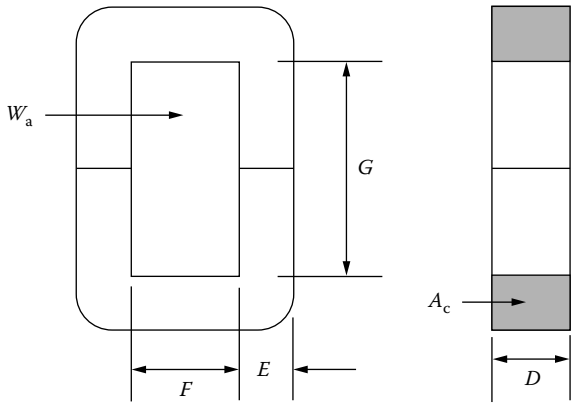

Figure 3-27. Tape C Core Dimensional Outline.

Table 3-12. Dimensional Data for Tape C Cores

C Cores, Magnetic Metals, 2 mil									
Part No.	D cm	E cm	F cm	G cm	Part No.	D cm	E cm	F cm	G cm
ML-002	0.635	0.476	0.635	1.588	ML-014	1.270	1.270	1.270	3.969
ML-004	0.635	0.635	0.635	2.223	ML-016	1.905	1.270	1.270	3.969
ML-006	1.270	0.635	0.635	2.223	ML-018	1.270	1.111	1.588	3.969
ML-008	0.953	0.953	0.953	3.016	ML-020	2.540	1.588	1.588	3.969
ML-010	1.588	0.953	0.953	3.016	ML-022	2.540	1.588	1.588	4.921
ML-012	1.270	1.111	1.270	2.858	ML-024	2.450	1.588	1.905	5.874

Table 3-13. Design Data for Tape C Cores

C Cores, Magnetic Metals, 2 mil										
Part No.	W_{tcu} grams	W_{tfe} grams	MLT cm	MPL cm	$\frac{W_a}{A_c}$	A_c cm^2	W_a cm^2	A_p cm^4	K_g cm^5	A_t cm^2
ML-002	13.0	13.0	3.6	6.4	3.747	0.269	1.008	0.271	0.0080	21.0
ML-004	19.8	22.6	3.9	8.3	3.933	0.359	1.412	0.507	0.0184	29.8
ML-006	27.2	45.2	5.4	8.3	1.967	0.718	1.412	1.013	0.0537	37.5
ML-008	58.4	72.5	5.7	11.8	3.556	0.808	2.874	2.323	0.1314	63.6
ML-010	73.5	120.8	7.2	11.8	2.134	1.347	2.874	3.871	0.2902	74.7
ML-012	95.1	121.7	7.4	12.7	2.891	1.256	3.630	4.558	0.3109	87.1
ML-014	137.7	170.4	7.7	15.6	3.513	1.435	5.041	7.236	0.5408	112.1
ML-016	160.5	255.6	9.0	15.6	2.341	2.153	5.041	10.854	1.0443	126.8
ML-018	176.2	149.1	7.9	15.6	5.019	1.256	6.303	7.915	0.5056	118.9
ML-020	254.5	478.4	11.4	17.5	1.756	3.590	6.303	22.626	2.8607	182.0
ML-022	315.6	530.5	11.4	19.4	2.177	3.590	7.815	28.053	3.5469	202.0
ML-024	471.7	600.1	11.9	21.9	3.117	3.590	11.190	40.170	4.8656	244.8

Downloaded By: 10.3.98.104 At: 00:06 16 Nov 2021; For: 9781439836880, chapter3, 10.1201/b10865-4

© 2011 by Taylor and Francis Group, LLC

Dimensional Outline for Tape Wound EE Cores

The dimensional outline for EE cores is shown in Figure 3-28. Dimensional data for EE cores is given in Table 3-14; design data is given in Table 3-15.

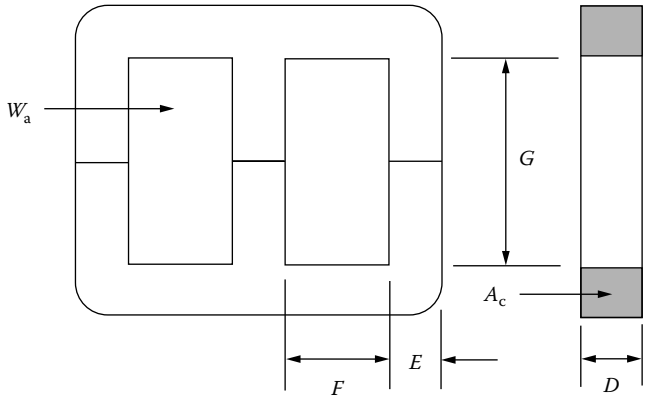

Figure 3-28. Tape EE Core Dimensional Outline.

Table 3-14. Dimensional Data for Tape EE Cores

3Phase E Cores, Magnetic Metals, 12 mil									
Part No.	D cm	E cm	F cm	G cm	Part No.	D cm	E cm	F cm	G cm
MTA-25	1.905	1.905	1.905	2.858	MTA-12	3.810	2.540	2.381	6.350
MTA-22	3.175	1.429	1.905	5.239	MTA-20	5.715	2.540	2.540	6.350
MTA-17	3.175	1.746	1.905	6.350	MTA-03	4.445	2.540	3.493	9.843
MTA-14	3.175	2.223	2.381	4.763	MTA-15	5.080	3.493	2.540	7.620

Table 3-15. Design Data for Tape EE Cores

3Phase E Cores, Magnetic Metals, 12 mil									
Part No.	W_{tcu} grams	W_{tfe} grams	MLT cm	$\frac{W_a}{2A_c}$	A_c cm^2	W_a cm^2	A_p cm^4	K_g cm^5	A_t cm^2
MTA-25	326	686	11.2	0.789	3.448	5.44	28.16	3.461	261
MTA-22	682	1073	12.8	1.158	4.310	9.98	64.53	8.686	324
MTA-17	867	1422	13.4	1.148	5.266	12.10	95.56	14.977	400
MTA-14	916	1803	15.1	0.846	6.705	11.34	114.06	20.203	468
MTA-12	1391	2899	17.3	0.822	9.194	15.12	208.50	44.438	613
MTA-20	1834	4420	21.3	0.585	13.790	16.13	333.64	86.347	737
MTA-03	3717	4597	20.3	1.602	10.730	34.38	553.15	117.079	993
MTA-15	2266	6544	22.0	0.574	16.860	19.35	489.40	150.340	956

Downloaded By: 10.3.98.104 At: 00:06 16 Nov 2021; For: 9781439836880, chapter3, 10.1201/b10865-4

© 2011 by Taylor and Francis Group, LLC

Design and Dimensional Data for Tape Wound Toroidal Cores

The dimensional outline for tape wound Toroidal cores is shown in Figure 3-29. Dimensional data for cased tape wound Toroidal cores is given in Table 3-16; design data is given in Table 3-17.

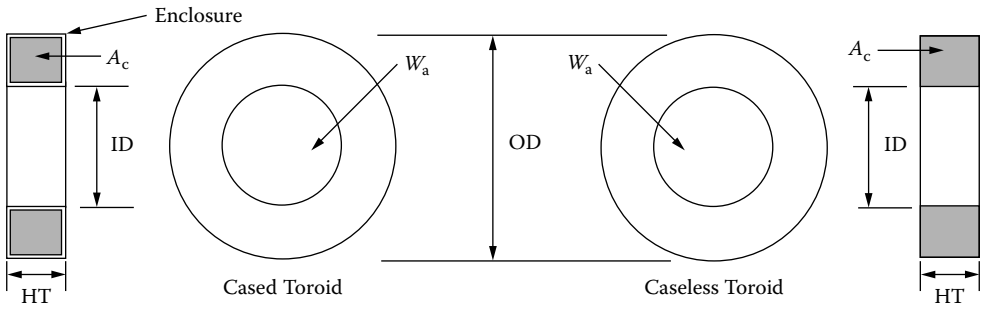

Figure 3-29. Tape Toroidal Core Dimensional Outline.

Table 3-16. Dimensional Data for Tape Toroidal Cores

Toroidal Tape Cores, Magnetics 2 mil Iron Alloy (cased and coated)											
Part No.	OD cm	ID cm	HT cm	Part No.	OD cm	ID cm	HT cm	Part No.	OD cm	ID cm	HT cm
52402	1.346	0.724	0.610	52057	2.134	1.359	0.610	52061	2.781	1.664	0.927
52107	1.651	1.041	0.610	52000	2.134	1.041	0.610	52004	3.429	2.286	0.927
52153	1.499	0.724	0.610	52155	1.659	0.884	0.927	52076	2.794	1.334	0.762
52056	1.816	1.041	0.610	52176	2.134	1.041	0.927	52007	2.794	1.334	0.927

Table 3-17. Design Data for Tape Toroidal Cores

Toroidal Tape Cores, Magnetics 2 mil Iron Alloy (cased)										
Part No.	W_{tcu} grams	W_{tfe} grams	MLT cm	MPL cm	$\frac{W_a}{A_c}$	A_c cm^2	W_a cm^2	A_p cm^4	K_g cm^5	A_t cm^2
52402	2.84	0.50	2.16	3.25	18.727	0.022	0.412	0.00906	0.0000369	9.80
52107	6.76	0.70	2.30	4.24	38.682	0.022	0.851	0.01872	0.0000716	15.50
52153	3.20	1.10	2.20	3.49	9.581	0.043	0.412	0.01772	0.0001385	11.20
52056	7.40	1.50	2.40	4.49	19.791	0.043	0.851	0.03659	0.0002622	16.80
52057	13.80	1.80	2.70	5.48	33.744	0.043	1.451	0.06239	0.0003975	23.70
52000	8.10	3.30	2.70	4.99	9.895	0.086	0.851	0.07319	0.0009324	20.60
52155	6.10	2.60	2.80	3.99	7.140	0.086	0.614	0.05280	0.0006487	16.00
52176	9.70	6.50	3.20	4.99	4.977	0.171	0.851	0.14552	0.0031105	23.30
52061	28.70	9.10	3.70	6.98	12.719	0.171	2.175	0.37193	0.0068756	40.30
52004	61.70	11.70	4.20	8.97	24.000	0.171	4.104	0.70178	0.0114291	62.20
52076	17.20	9.50	3.50	6.48	7.244	0.193	1.398	0.26981	0.0059513	34.60
52007	18.50	12.70	3.70	6.48	5.440	0.257	1.398	0.35929	0.0099823	36.40

Downloaded By: 10.3.98.104 At: 00:06 16 Nov 2021; For: 9781439836880, chapter3, 10.1201/b10865-4

© 2011 by Taylor and Francis Group, LLC

Design and Dimensional Data for EE Ferrite Cores

The dimensional outline for EE ferrite cores is shown in Figure 3-30. Dimensional data for EE ferrite cores is given in Table 3-18; design data is given in Table 3-19.

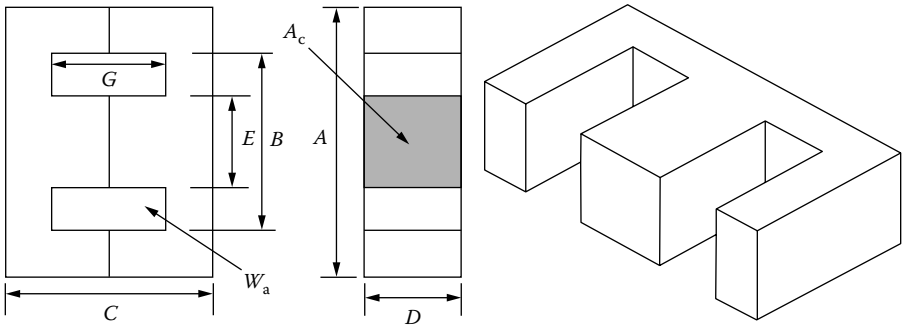

Figure 3-30. Dimension Outline for EE Ferrite Cores.

Table 3-18. Dimensional Data for EE Ferrite Cores

EE, Ferrite Cores (Magnetics)													
Part No.	A cm	B cm	C cm	D cm	E cm	G cm	Part No.	A cm	B cm	C cm	D cm	E cm	G cm
EE-187	1.910	1.433	1.620	0.475	0.475	1.140	EE-21	4.060	2.860	3.320	1.245	1.245	2.080
EE-2425	2.540	1.880	1.930	0.635	0.635	1.280	EE-625	4.690	3.920	3.920	1.560	1.560	2.420
EE-375	3.420	2.550	2.820	0.930	0.930	1.960	EE-75	5.610	3.810	4.720	1.880	1.880	2.920

Table 3-19. Design Data for EE Ferrite Cores

EE, Ferrite Cores (Magnetics)											
Part No.	W_{tcu} grams	W_{tfe} grams	MLT cm	MPL cm	$\frac{W_a}{A_c}$	A_c cm^2	W_a cm^2	A_p cm^4	K_g cm^5	A_t cm^2	*AL mh/1K
EE-187	6.8	4.4	3.8	4.01	2.239	0.226	0.506	0.114	0.0027	14.4	501
EE-2425	13.9	9.5	4.9	4.85	2.010	0.395	0.794	0.314	0.0101	23.5	768
EE-375	36.4	33.0	6.6	6.94	1.769	0.870	1.539	1.339	0.0706	45.3	1160
EE-21	47.3	57.0	8.1	7.75	1.103	1.490	1.643	2.448	0.1801	60.9	1696
EE-625	64.4	103.0	9.4	8.90	0.825	2.340	1.930	4.516	0.4497	81.8	2330
EE-75	111.1	179.0	11.2	10.70	0.831	3.370	2.799	9.433	1.1353	118.0	3519

* This AL value has been normalized for a permeability of 1K. For a close approximation of AL for other values of permeability, multiply this AL value by the new permeability in kilo-perm. If the new permeability is 2500, then use 2.5.

Downloaded By: 10.3.98.104 At: 00:06 16 Nov 2021; For: 9781439836880, chapter3, 10.1201/b10865-4

© 2011 by Taylor and Francis Group, LLC

Design and Dimensional Data for EE and EI Planar, Ferrite Cores

The dimensional outline for EE and EI planar ferrite cores is shown in Figure 3-31. Dimensional data for EE and EI planar ferrite cores is given in Table 3-20; design data is given in Table 3-21.

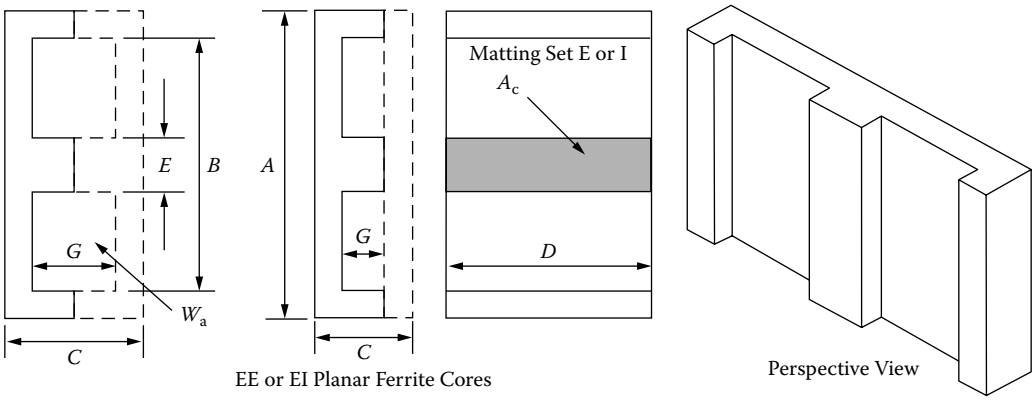

Figure 3-31. Dimension Outline for EE, EI Planar Ferrite Cores.

Table 3-20. Dimensional Data for EE, EI Planar Ferrite Cores

EE&EI/LP, Ferrite Cores (Magnetics)													
Part No.	A cm	B cm	C cm	D cm	E cm	G cm	Part No.	A cm	B cm	C cm	D cm	E cm	G cm
EI-41805	1.800	1.370	0.639	1.000	0.400	0.200	EI-43208	3.175	2.490	0.953	2.032	0.635	0.318
EE-41805	1.800	1.370	0.800	1.000	0.400	0.400	EE-43208	3.175	2.490	1.270	2.032	0.635	0.636
EI-42216	2.180	1.610	0.865	1.580	0.500	0.305	EI-44310	4.320	3.470	1.360	2.790	0.810	0.540
EE-42216	2.180	1.610	1.140	1.580	0.500	0.610	EE-44310	4.320	3.470	1.900	2.790	0.810	1.080

Table 3-21. Design Data for EE, EI Planar Ferrite Cores

EE&EI/LP, Ferrite Cores (Magnetics)											
Part No.	W_{tcu} grams	W_{tfe} grams	MLT cm	MPL cm	$\frac{W_a}{A_c}$	A_c cm^2	W_a cm^2	A_p cm^4	K_g cm^5	A_t cm^2	*AL mh/1K
EI-41805	1.5	4.1	4.7	2.03	0.2269	0.401	0.091	0.0365	0.00125	10.4	1410
EE-41805	3.1	4.9	4.7	2.42	0.4564	0.401	0.183	0.0734	0.00250	11.6	1460
EI-42216	3.8	10.4	6.5	2.58	0.2035	0.806	0.164	0.1322	0.00656	17.8	2699
EE-42216	7.8	13.0	6.5	3.21	0.4169	0.806	0.336	0.2708	0.01343	20.5	2203
EI-43208	8.9	22.0	8.9	3.54	0.2223	1.300	0.289	0.3757	0.02195	33.4	3183
EE-43208	17.8	26.0	8.9	4.17	0.4354	1.300	0.566	0.7358	0.04299	37.9	2913
EI-44310	29.7	58.0	11.9	5.06	0.3057	2.290	0.700	1.6030	0.12339	65.4	4622
EE-44310	59.4	70.8	11.9	6.15	0.6114	2.290	1.400	3.2060	0.24678	75.3	3944

* This AL value has been normalized for a permeability of 1K. For a close approximation of AL for other values of permeability, multiply this AL value by the new permeability in kilo-perm. If the new permeability is 2500, then use 2.5.

Downloaded By: 10.3.98.104 At: 00:06 16 Nov 2021; For: 9781439836880, chapter3, 10.1201/b10865-4

© 2011 by Taylor and Francis Group, LLC

Design and Dimensional Data for EC, Ferrite Cores

The dimensional outline for EC ferrite cores is shown in Figure 3-32. Dimensional data for EC ferrite cores is given in Table 3-22; design data is given in Table 3-23.

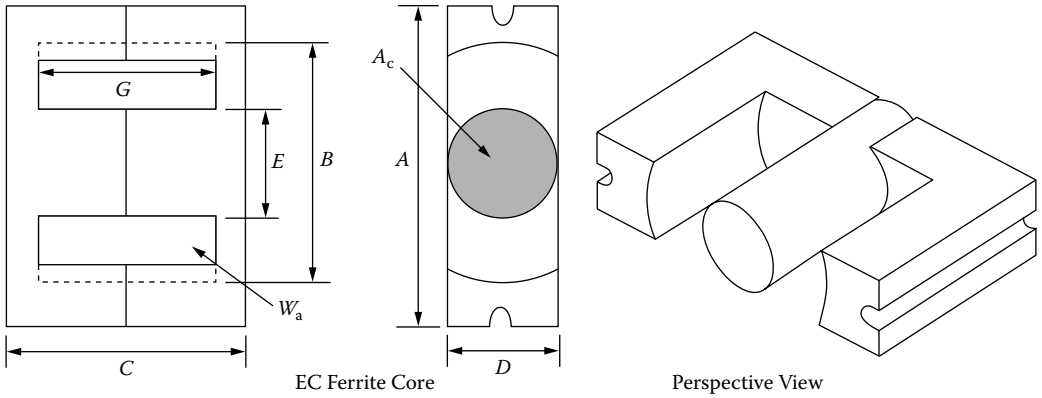

Figure 3-32. Dimension Outline for EC Ferrite Cores.

Table 3-22. Dimensional Data for EC Ferrite Cores

EC, Ferrite Cores (Magnetics)						
Part No.	A cm	B cm	C cm	D cm	E cm	G cm
EC-35	3.450	2.275	3.460	0.950	0.950	2.460
EC-41	4.060	2.700	3.900	1.160	1.160	2.780
EC-52	5.220	3.300	4.840	1.340	1.340	3.180
EC-70	7.000	4.450	6.900	1.640	1.640	4.450

Table 3-23. Design Data for EC Ferrite Cores

EC, Ferrite Cores (Magnetics)											
Part No.	W_{tcu} grams	W_{tfe} grams	MLT cm	MPL cm	$\frac{W_a}{A_c}$	A_c cm^2	W_a cm^2	A_p cm^4	K_g cm^5	A_t cm^2	*AL mh/1K
EC-35	35.1	36.0	6.3	7.59	1.864	0.843	1.571	1.324	0.071	50.2	962
EC-41	55.4	52.0	7.5	8.76	1.721	1.210	2.082	2.519	0.163	67.6	1510
EC-52	97.8	111.0	9.0	10.30	1.689	1.800	3.040	5.472	0.438	106.5	1681
EC-70	256.7	253.0	11.7	14.10	2.214	2.790	6.177	17.234	1.644	201.7	1917

* This AL value has been normalized for a permeability of 1K. For a close approximation of AL for other values of permeability, multiply this AL value by the new permeability in kilo-perm. If the new permeability is 2500, then use 2.5.

Downloaded By: 10.3.98.104 At: 00:06 16 Nov 2021; For: 9781439836880, chapter3, 10.1201/b10865-4

© 2011 by Taylor and Francis Group, LLC

Design and Dimensional Data for ETD, Ferrite Cores

The dimensional outline for ETD ferrite cores is shown in Figure 3-33. Dimensional data for ETD ferrite cores is given in Table 3-24; design data is given in Table 3-25.

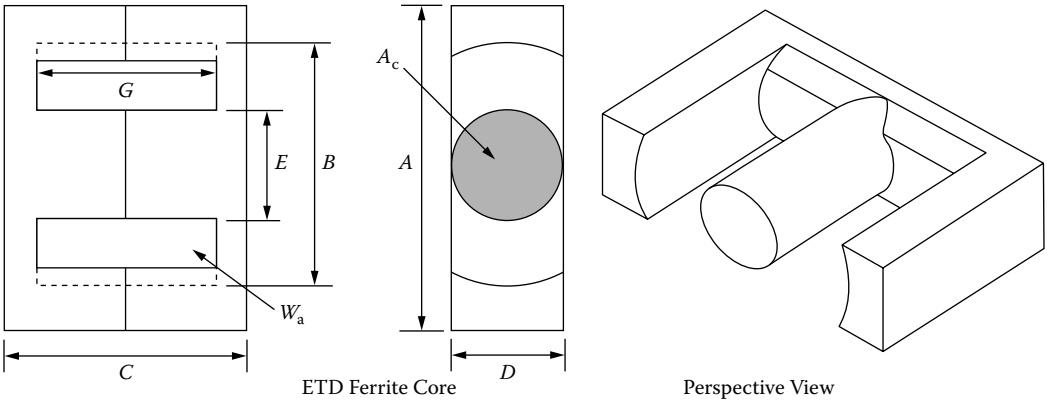

Figure 3-33. Dimension Outline for ETD Ferrite Cores.

Table 3-24. Dimensional Data for ETD Ferrite Cores

ETD, Ferrite Cores (Ferroxcube)													
Part No.	A cm	B cm	C cm	D cm	E cm	G cm	Part No.	A cm	B cm	C cm	D cm	E cm	G cm
ETD-29	3.060	2.270	3.160	0.980	0.980	2.200	ETD-49	4.980	3.610	4.940	1.670	1.670	3.540
ETD-34	3.500	2.560	3.460	1.110	1.110	2.360	ETD-54	5.450	4.120	5.520	1.890	1.890	4.040
ETD-39	4.000	2.930	3.960	1.280	1.280	2.840	ETD-59	5.980	4.470	6.200	2.165	2.165	4.500
ETD-44	4.500	3.250	4.460	1.520	1.520	3.220							

Table 3-25. Design Data for ETD Ferrite Cores

ETD, Ferrite Cores (Ferroxcube)											
Part No.	W_{tcu} grams	W_{tfe} grams	MLT cm	MPL cm	W_a/A_c	A_c cm^2	W_a cm^2	A_p cm^4	K_g cm^5	A_t cm^2	*AL mh/1K
ETD-29	32.1	28.0	6.4	7.20	1.865	0.761	1.419	1.0799	0.0514	42.5	1000
ETD-34	43.4	40.0	7.1	7.87	1.757	0.974	1.711	1.6665	0.0914	53.4	1182
ETD-39	69.3	60.0	8.3	9.22	1.871	1.252	2.343	2.9334	0.1770	69.9	1318
ETD-44	93.2	94.0	9.4	10.30	1.599	1.742	2.785	4.8515	0.3596	87.9	1682
ETD-49	126.2	124.0	10.3	11.40	1.627	2.110	3.434	7.2457	0.5937	107.9	1909
ETD-54	186.9	180.0	11.7	12.70	1.609	2.800	4.505	12.6140	1.2075	133.7	2273
ETD-59	237.7	260.0	12.9	13.90	1.410	3.677	5.186	19.0689	2.1742	163.1	2727

* This AL value has been normalized for a permeability of 1K. For a close approximation of AL for other values of permeability, multiply this AL value by the new permeability in kilo-perm. If the new permeability is 2500, then use 2.5.

Downloaded By: 10.3.98.104 At: 00:06 16 Nov 2021; For: 9781439836880, chapter3, 10.1201/b10865-4

© 2011 by Taylor and Francis Group, LLC

Design and Dimensional Data for ETD/(low profile), Ferrite Cores

The dimensional outline for ETD/lp low profile ferrite cores is shown in Figure 3-34. Dimensional data for ETD/lp low profile ferrite cores is given in Table 3-26; design data is given in Table 3-27.

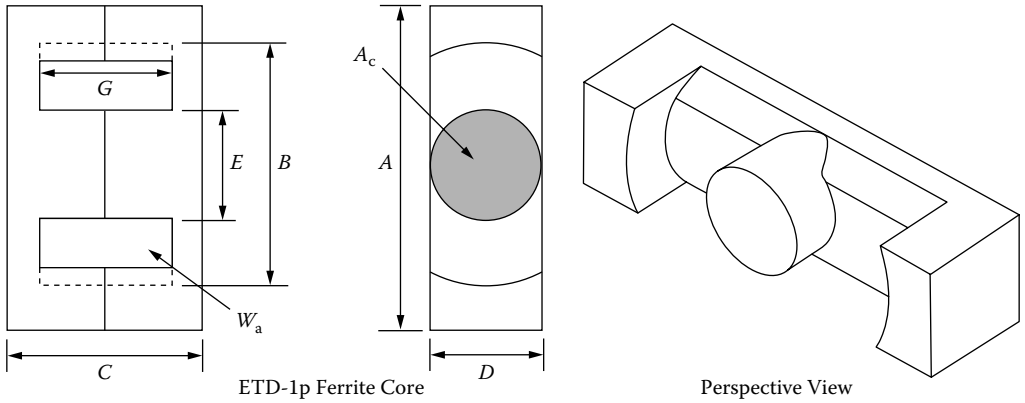

Figure 3-34. Dimension Outline for ETD/lp Ferrite Cores.

Table 3-26. Dimensional Data for ETD/lp Ferrite Cores

ETD/lp, Ferrite Cores (TSC Ferrite International)						
Part No.	A cm	B cm	C cm	D cm	E cm	G cm
ETD34(lp)	3.421	2.631	1.804	1.080	1.080	0.762
ETD39(lp)	3.909	3.010	1.798	1.250	1.250	0.762
ETD44(lp)	4.399	3.330	1.920	1.481	1.481	0.762
ETD49(lp)	4.869	3.701	2.082	1.631	1.631	0.762

Table 3-27. Design Data for ETD/lp Ferrite Cores

ETD/lp, Ferrite Cores (TSC Ferrite International)											
Part No.	W_{tcu} grams	W_{tfe} grams	MLT cm	MPL cm	W_a/A_c	A_c cm^2	W_a cm^2	A_p cm^4	K_g cm^5	A_t cm^2	*AL mh/1K
ETD34(lp)	15.1	32.7	7.2	4.65	0.609	0.970	0.591	0.5733	0.0309	33.1	2382
ETD39(lp)	20.0	46.3	8.4	5.03	0.559	1.200	0.671	0.8052	0.0460	39.6	2838
ETD44(lp)	24.6	72.1	9.5	5.40	0.420	1.730	0.727	1.2577	0.0916	48.4	3659
ETD49(lp)	29.1	95.0	10.4	5.85	0.374	2.110	0.789	1.6648	0.1351	58.2	4120

* This AL value has been normalized for a permeability of 1K. For a close approximation of AL for other values of permeability, multiply this AL value by the new permeability in kilo-perm. If the new permeability is 2500, then use 2.5.

Downloaded By: 10.3.98.104 At: 00:06 16 Nov 2021; For: 9781439836880, chapter3, 10.1201/b10865-4

© 2011 by Taylor and Francis Group, LLC

Design and Dimensional Data for ER, Ferrite Cores

Surface Mount Device, SMD

The dimensional outline for ER ferrite cores is shown in Figure 3-35. Dimensional data for ER ferrite cores is given in Table 3-28; design data is given in Table 3-29.

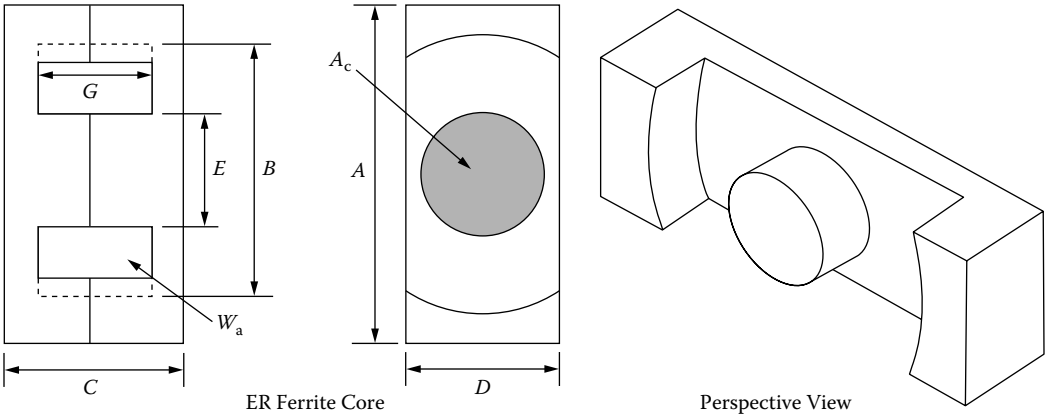

Figure 3-35. Dimension Outline for ER Ferrite Cores.

Table 3-28. Dimensional Data for ER Ferrite Cores

ER, Ferrite Cores (Ferroxcube)													
Part No.	A cm	B cm	C cm	D cm	E cm	G cm	Part No.	A cm	B cm	C cm	D cm	E cm	G cm
ER 9.5	0.950	0.750	0.490	0.500	0.350	0.320	ER 42	4.200	3.005	4.480	1.560	1.550	3.090
ER 11	1.100	0.870	0.490	0.600	0.425	0.300	ER 48	4.800	3.800	4.220	2.100	1.800	2.940
ER 35	3.500	2.615	4.140	1.140	1.130	2.950	ER 54	5.350	4.065	3.660	1.795	1.790	2.220

Table 3-29. Design Data for ER Ferrite Cores

ER, Ferrite Cores (Ferroxcube)											
Part No.	W_{tcu} grams	W_{tfe} grams	MLT cm	MPL cm	W_a/A_c	A_c cm^2	W_a cm^2	A_p cm^4	K_g cm^5	A_t cm^2	*AL mh/1K
ER 9.5	0.6	0.7	2.700	1.42	0.842	0.076	0.0640	0.00486	0.000055	3.0	435
ER 11	0.7	1.0	3.200	1.47	0.650	0.103	0.0670	0.00690	0.000089	3.7	609
ER 35	56.7	46.0	7.300	9.08	2.190	1.000	2.1900	2.19000	0.120000	62.4	1217
ER 42	72.9	96.0	9.100	9.88	1.189	1.890	2.2480	4.24872	0.352971	81.0	2000
ER 48	120.7	128.0	11.500	10.00	1.185	2.480	2.9400	7.29120	0.628945	100.1	2478
ER 54	101.9	122.0	11.400	9.18	1.052	2.400	2.5250	6.06000	0.510316	96.2	2652

* This AL value has been normalized for a permeability of 1K. For a close approximation of AL for other values of permeability, multiply this AL value by the new permeability in kilo-perm. If the new permeability is 2500, then use 2.5.

Downloaded By: 10.3.98.104 At: 00:06 16 Nov 2021; For: 9781439836880, chapter3, 10.1201/b10865-4

© 2011 by Taylor and Francis Group, LLC

Design and Dimensional Data for EFD, Ferrite Cores

Surface Mount Device, SMD

The EFD cores, (**E**conomic **F**lat **D**esign), offer a significant advance in power transformer circuit miniaturization. The dimensional outline for EFD ferrite cores is shown in Figure 3-36. Dimensional data for EFD ferrite cores is given in Table 3-30; design data is given in Table 3-31.

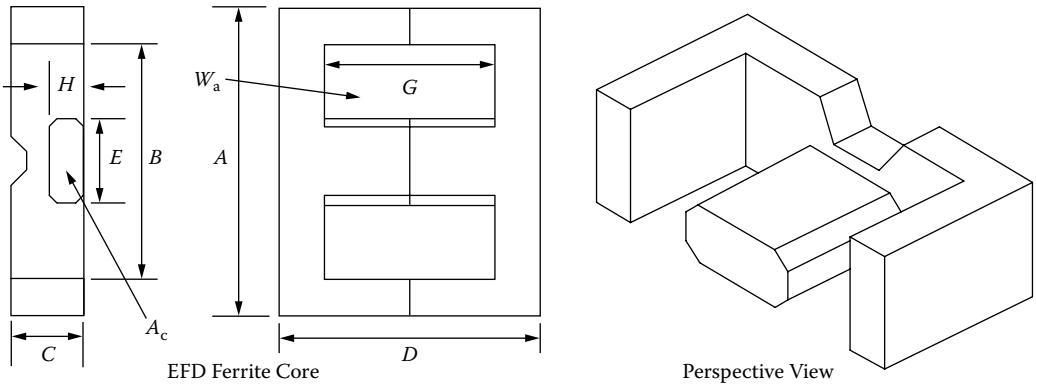

Figure 3-36. Dimension Outline for EFD Ferrite Cores.

Table 3-30. Dimensional Data for EFD Ferrite Cores

EFD, Ferrite Cores (Ferroxcube)							
Part No.	A cm	B cm	C cm	D cm	E cm	G cm	H cm
EFD-10	1.050	0.765	0.270	1.040	0.455	0.750	0.145
EFD-15	1.500	1.100	0.465	1.500	0.530	1.100	0.240
EFD-20	2.000	1.540	0.665	2.000	0.890	1.540	0.360
EFD-25	2.500	1.870	0.910	2.500	1.140	1.860	0.520
EFD-30	3.000	2.240	0.910	3.000	1.460	2.240	0.490

Table 3-31. Design Data for EFD Ferrite Cores

EFD, Ferrite Cores (Ferroxcube)											
Part No.	W_{tcu} grams	W_{tfe} grams	MLT cm	MPL cm	$\frac{W_a}{A_c}$	A_c cm^2	W_a cm^2	A_p cm^4	K_g cm^5	A_t cm^2	*AL mh/1K
EFD-10	0.8	0.90	1.8	2.37	1.611	0.072	0.116	0.00835	0.00013	3.3	254
EFD-15	3.0	2.80	2.7	3.40	2.093	0.150	0.314	0.04710	0.00105	7.3	413
EFD-20	6.8	7.00	3.8	4.70	1.616	0.310	0.501	0.15531	0.00507	13.3	565
EFD-25	11.5	16.00	4.8	5.70	1.171	0.580	0.679	0.39382	0.01903	21.6	957
EFD-30	17.0	24.00	5.5	6.80	1.267	0.690	0.874	0.60306	0.03026	28.9	913

* This AL value has been normalized for a permeability of 1K. For a close approximation of AL for other values of permeability, multiply this AL value by the new permeability in kilo-perm. If the new permeability is 2500, then use 2.5.

Downloaded By: 10.3.98.104 At: 00:06 16 Nov 2021; For: 9781439836880, chapter3, 10.1201/b10865-4

© 2011 by Taylor and Francis Group, LLC

Design and Dimensional Data for EPC, Ferrite Cores

Surface Mount Device, SMD

The dimensional outline for EPC ferrite cores is shown in Figure 3-37. Dimensional data for EPC ferrite cores is given in Table 3-32; design data is given in Table 3-33.

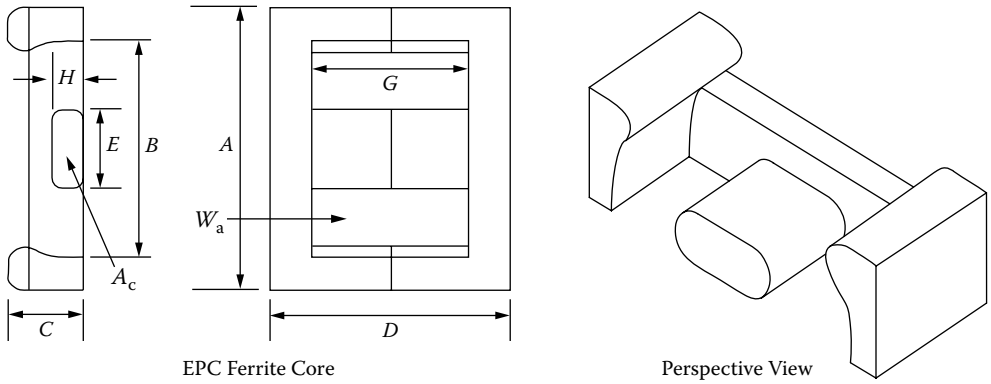

Figure 3-37. Dimension Outline for EPC Ferrite Cores.

Table 3-32. Dimensional Data for EPC Ferrite Cores

EPC, Ferrite Cores (TDK)							
Part No.	A cm	B cm	C cm	D cm	E cm	G cm	H cm
EPC-10	1.020	0.760	0.340	0.810	0.500	0.530	0.190
EPC-13	1.325	1.050	0.460	1.320	0.560	0.900	0.205
EPC-17	1.760	1.430	0.600	1.710	0.770	1.210	0.280
EPC-19	1.910	1.580	0.600	1.950	0.850	1.450	0.250
EPC-25	2.510	2.040	0.800	2.500	1.150	1.800	0.400
EPC-27	2.710	2.160	0.800	3.200	1.300	2.400	0.400
EPC-30	3.010	2.360	0.800	3.500	1.500	2.600	0.400

Table 3-33. Design Data for EPC Ferrite Cores

EPC, Ferrite Cores (TDK)											
Part No.	W_{tcu} grams	W_{tfe} grams	MLT cm	MPL cm	$\frac{W_a}{A_c}$	A_c cm^2	W_a cm^2	A_p cm^4	K_g cm^5	A_t cm^2	*AL mh/1K
EPC-10	0.5	1.1	1.9	1.78	0.735	0.094	0.069	0.00648	0.000128	2.9	416
EPC-13	2.0	2.1	2.5	3.06	1.768	0.125	0.221	0.02763	0.000553	5.9	363
EPC-17	4.9	4.5	3.4	4.02	1.750	0.228	0.399	0.09097	0.002440	10.2	479
EPC-19	6.9	5.3	3.7	4.61	2.330	0.227	0.529	0.12008	0.002947	12.1	392
EPC-25	14.8	13.0	5.0	5.92	1.804	0.464	0.837	0.38837	0.014416	20.6	650
EPC-27	18.8	18.0	5.1	7.31	1.890	0.546	1.032	0.56347	0.024130	26.8	642
EPC-30	21.9	23.0	5.5	8.16	1.833	0.610	1.118	0.68198	0.030255	31.5	654

* This AL value has been normalized for a permeability of 1K. For a close approximation of AL for other values of permeability, multiply this AL value by the new permeability in kilo-perm. If the new permeability is 2500, then use 2.5.

Downloaded By: 10.3.98.104 At: 00:06 16 Nov 2021; For: 9781439836880, chapter3, 10.1201/b10865-4

© 2011 by Taylor and Francis Group, LLC

Design and Dimensional Data for PC, Ferrite Cores

The dimensional outline for PC ferrite pot cores is shown in Figure 3-38. Dimensional data for PC ferrite pot cores is given in Table 3-34; design data is given in Table 3-35.

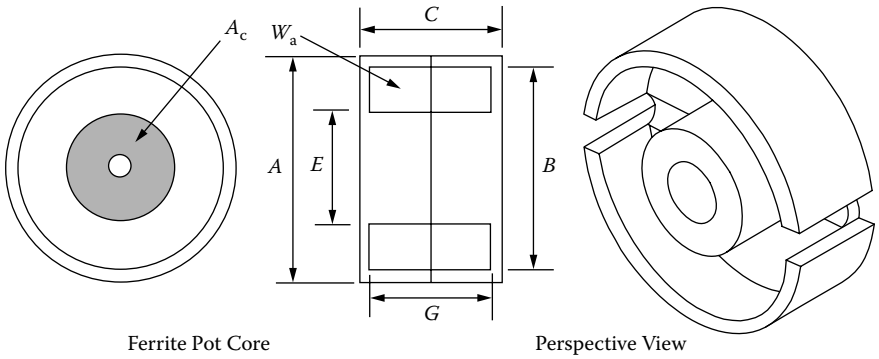

Figure 3-38. Dimension Outline for PC Ferrite Cores.

Table 3-34. Dimensional Data for PC Ferrite Cores

PC, Ferrite Cores (Magnetics)											
Part No.	A cm	B cm	C cm	E cm	G cm	Part No.	A cm	B cm	C cm	E cm	G cm
PC-40905	0.915	0.763	0.526	0.380	0.345	PC-42616	2.550	2.160	1.610	1.130	1.102
PC-41408	1.405	1.160	0.840	0.580	0.580	PC-43019	3.000	2.540	1.890	1.330	1.300
PC-41811	1.800	1.515	1.060	0.740	0.740	PC-43622	3.560	3.040	2.190	1.590	1.460
PC-42213	2.160	1.820	1.340	0.940	0.940	PC-44229	4.240	3.630	2.940	1.740	2.040

Table 3-35. Design Data for PC Ferrite Cores

PC, Ferrite Cores (Magnetics)											
Part No.	W_{tcu} grams	W_{tfe} grams	MLT cm	MPL cm	$\frac{W_a}{A_c}$	A_c cm^2	W_a cm^2	A_p cm^4	K_g cm^5	A_t cm^2	*AL mh/1K
PC-40905	0.5	1.0	1.9	1.25	0.654	0.101	0.066	0.00668	0.000142	2.8	440
PC-41408	1.6	3.2	2.9	1.97	0.670	0.251	0.168	0.04222	0.001462	6.8	893
PC-41811	3.5	7.3	3.7	2.59	0.662	0.433	0.287	0.12418	0.005813	11.1	1333
PC-42213	6.2	13.0	4.4	3.12	0.652	0.634	0.414	0.26222	0.015114	16.4	1757
PC-42616	10.1	20.0	5.3	3.76	0.604	0.939	0.568	0.53288	0.037764	23.1	2267
PC-43019	16.7	34.0	6.3	4.50	0.574	1.370	0.787	1.07751	0.093726	31.9	2904
PC-43622	26.7	57.0	7.5	5.29	0.524	2.020	1.059	2.13817	0.230352	44.5	3783
PC-44229	55.9	104.0	8.6	6.85	0.718	2.686	1.928	5.17807	0.646898	67.7	4000

* This AL value has been normalized for a permeability of 1K. For a close approximation of AL for other values of permeability, multiply this AL value by the new permeability in kilo-perm. If the new permeability is 2500, then use 2.5.

Downloaded By: 10.3.98.104 At: 00:06 16 Nov 2021; For: 9781439836880, chapter3, 10.1201/b10865-4

© 2011 by Taylor and Francis Group, LLC

Design and Dimensional Data for EP, Ferrite Cores

The EP ferrite cores are typically used in transformer applications. The shape of the assembly is almost cubical, allowing high package densities on the PCB. The dimensional outline for EP ferrite cores is shown in Figure 3-39. Dimensional data for EP ferrite cores is given in Table 3-36; design data is given in Table 3-37.

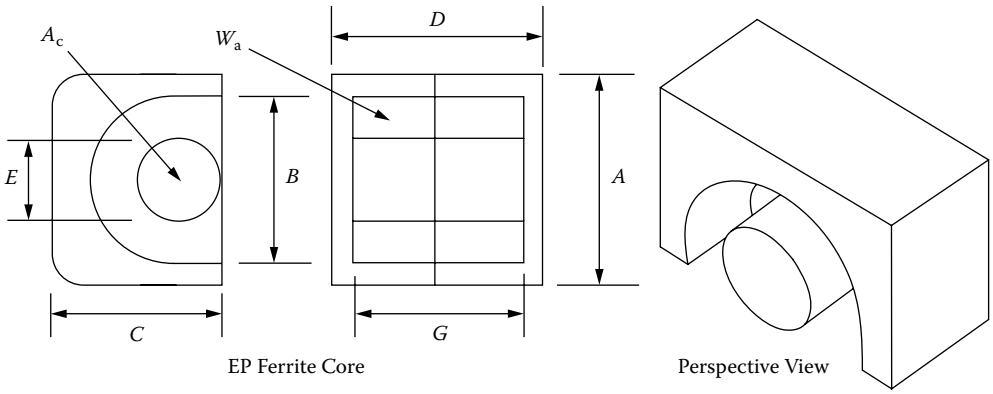

Figure 3-39. Dimension Outline for EP Ferrite Cores.

Table 3-36. Dimensional Data for EP Ferrite Cores

EP, Ferrite Cores (Magnetics)						
Part No.	A cm	B cm	C cm	D cm	E cm	G cm
EP-07	0.920	0.720	0.635	0.740	0.340	0.500
EP-10	1.150	0.920	0.760	1.030	0.345	0.720
EP-13	1.250	1.000	0.880	1.290	0.435	0.920
EP-17	1.800	1.200	1.100	1.680	0.570	1.140
EP-20	2.400	1.650	1.500	2.140	0.880	1.440

Table 3-37. Design Data for EP Ferrite Cores

EP, Ferrite Cores (Magnetics)											
Part No.	W_{tcu} grams	W_{tfe} grams	MLT cm	MPL cm	W_a/A_c	A_c cm^2	W_a cm^2	A_p cm^4	K_g cm^5	A_t cm^2	*AL mh/1K
EP-07	1.4	1.4	1.8	1.55	0.888	0.107	0.095	0.01017	0.00024	3.5	414
EP-10	1.6	2.8	2.1	1.93	1.832	0.113	0.207	0.02339	0.00050	5.7	400
EP-13	2.0	5.1	2.4	2.42	1.200	0.195	0.234	0.04563	0.00148	7.7	667
EP-17	11.6	11.6	2.9	2.95	0.955	0.337	0.322	0.10851	0.00504	13.7	1034
EP-20	7.4	27.6	4.2	4.11	0.632	0.787	0.497	0.39114	0.02932	23.8	1667

* This AL value has been normalized for a permeability of 1K. For a close approximation of AL for other values of permeability, multiply this AL value by the new permeability in kilo-perm. If the new permeability is 2500, then use 2.5.

Downloaded By: 10.3.98.104 At: 00:06 16 Nov 2021; For: 9781439836880, chapter3, 10.1201/b10865-4

© 2011 by Taylor and Francis Group, LLC

Design and Dimensional Data for PQ, Ferrite Cores

The PQ ferrite cores, (**P**ower **Q**uality), feature round center legs with rather small cross-sections. The dimensional outline for PQ ferrite cores is shown in Figure 3-40. Dimensional data for PQ ferrite cores is given in Table 3-38; design data is given in Table 3-39.

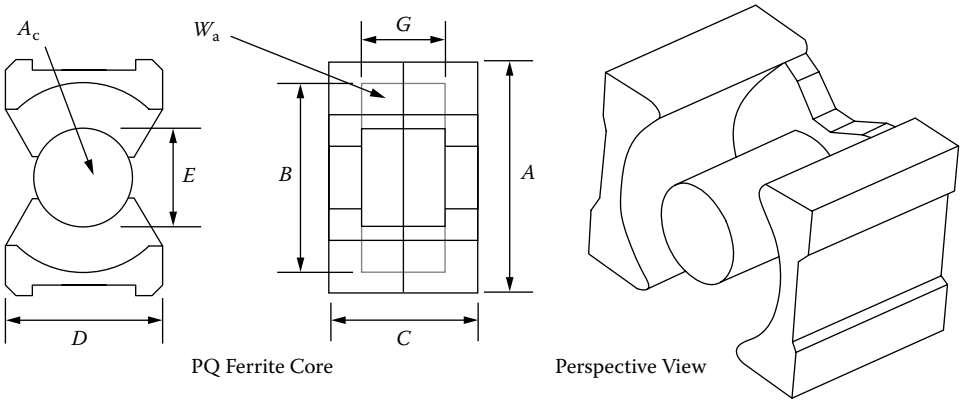

Figure 3-40. Dimension Outline for PQ Ferrite Cores.

Table 3-38. Dimensional Data for PQ Ferrite Cores

PQ, Ferrite Cores (TDK)													
Part No.	A cm	B cm	C cm	D cm	E cm	G cm	Part No.	A cm	B cm	C cm	D cm	E cm	G cm
PQ20/16	2.050	1.800	1.620	1.400	0.880	1.030	PQ32/30	3.200	2.750	3.035	2.200	1.345	2.130
PQ20/20	2.050	1.800	2.020	1.400	0.880	1.430	PQ35/35	3.510	3.200	3.475	2.600	1.435	2.500
PQ26/20	2.650	2.250	2.015	1.900	1.200	1.150	PQ40/40	4.050	3.700	3.975	2.800	1.490	2.950
PQ26/25	2.650	2.250	2.475	1.900	1.200	1.610	PQ50/50	5.000	4.400	4.995	3.200	2.000	3.610
PQ32/20	3.200	2.750	2.055	2.200	1.345	1.150							

Table 3-39. Design Data for PQ Ferrite Cores

PQ, Ferrite Cores (TDK)											
Part No.	W_{tcu} grams	W_{tfe} grams	MLT cm	MPL cm	W_a/A_c	A_c cm^2	W_a cm^2	A_p cm^4	K_g cm^5	A_t cm^2	*AL mh/1K
PQ20/16	7.4	13.0	4.4	3.74	0.765	0.620	0.474	0.294	0.0166	16.9	1617
PQ20/20	10.4	15.0	4.4	4.54	1.061	0.620	0.658	0.408	0.0230	19.7	1313
PQ26/20	31.0	31.0	5.6	4.63	0.508	1.190	0.604	0.719	0.0611	28.4	2571
PQ26/25	17.0	36.0	5.7	5.55	0.716	1.180	0.845	0.997	0.0826	32.6	2187
PQ32/20	18.9	42.0	6.6	5.55	0.475	1.700	0.808	1.374	0.1415	36.3	3046
PQ32/30	35.5	55.0	6.7	7.46	0.929	1.610	1.496	2.409	0.2315	46.9	2142
PQ35/35	59.0	73.0	7.5	8.79	1.126	1.960	2.206	4.324	0.4520	60.7	2025
PQ40/40	97.2	95.0	8.4	10.20	1.622	2.010	3.260	6.553	0.6272	77.1	1792
PQ50/50	158.5	195.0	10.3	11.30	1.321	3.280	4.332	14.209	1.8099	113.9	2800

* This AL value has been normalized for a permeability of 1K. For a close approximation of AL for other values of permeability, multiply this AL value by the new permeability in kilo-perm. If the new permeability is 2500, then use 2.5.

Downloaded By: 10.3.98.104 At: 00:06 16 Nov 2021; For: 9781439836880, chapter3, 10.1201/b10865-4

© 2011 by Taylor and Francis Group, LLC

Design and Dimensional Data for PQ/(low profile), Ferrite Cores

The PQ/lp cores are a cut-down version of the standard PQ cores. The PQ/lp cores have a substantially reduced total height. The dimensional outline for PQ ferrite cores is shown in Figure 3-41. Dimensional data for PQ ferrite cores is given in Table 3-40; design data is given in Table 3-41.

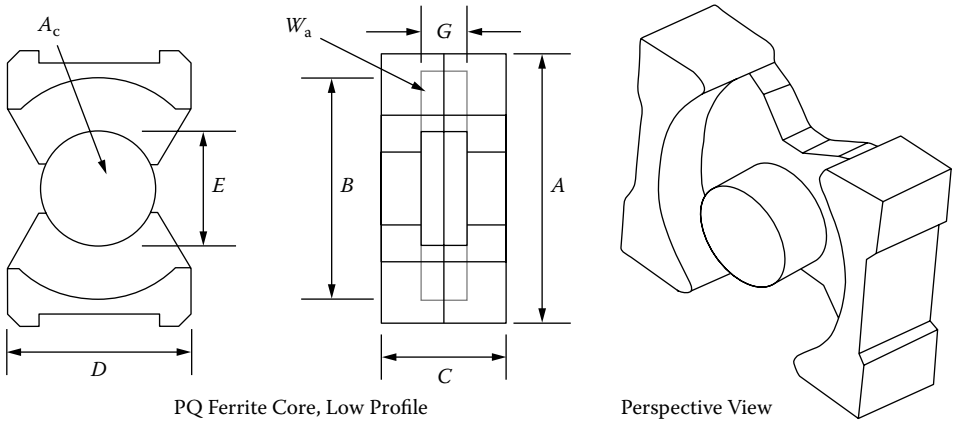

Figure 3-41. Dimension Outline for PQ/lp Ferrite Cores.

Table 3-40. Dimensional Data for PQ/lp Ferrite Cores

PQ/lp, Ferrite Cores (Ferrite International)						
Part No.	A cm	B cm	C cm	D cm	E cm	G cm
PQ20-14-14lp	2.125	1.801	1.352	1.400	0.884	0.762
PQ26-16-14lp	2.724	2.250	1.630	1.900	1.199	0.762
PQ32-17-22lp	3.302	2.751	1.670	2.200	1.348	0.762
PQ35-17-26lp	3.612	3.200	1.738	2.601	1.435	0.762
PQ40-18-28lp	4.148	3.701	1.784	2.799	1.491	0.762

Table 3-41. Design Data for PQ/lp Ferrite Cores

PQ/lp, Ferrite Cores (TSC Ferrite International)											
Part No.	W_{tcu} grams	W_{tfe} grams	MLT cm	MPL cm	$\frac{W_a}{A_c}$	A_c cm^2	W_a cm^2	A_p cm^4	K_g cm^5	A_t cm^2	*AL mh/1K
PQ20-14-14lp	5.4	12.5	4.4	3.2	0.563	0.620	0.349	0.216	0.0122	15.4	1948
PQ26-16-19lp	7.9	28.0	5.6	3.9	0.336	1.190	0.400	0.476	0.0405	25.4	3170
PQ32-17-22lp	12.5	39.4	6.6	4.8	0.315	1.700	0.535	0.910	0.0937	32.9	3659
PQ35-17-26lp	17.8	44.9	7.4	5.3	0.343	1.960	0.672	1.317	0.1395	40.4	3893
PQ40-18-28lp	24.9	63.5	8.3	5.8	0.419	2.010	0.842	1.692	0.1639	48.0	3850

* This AL value has been normalized for a permeability of 1K. For a close approximation of AL for other values of permeability, multiply this AL value by the new permeability in kilo-perm. If the new permeability is 2500, then use 2.5.

Downloaded By: 10.3.98.104 At: 00:06 16 Nov 2021; For: 9781439836880, chapter3, 10.1201/b10865-4

© 2011 by Taylor and Francis Group, LLC

Design and Dimensional Data for RM, Ferrite Cores

The RM cores, (**R**ectangular **M**odular), were developed for high Printed Circuit Board, (PCB), packing densities. The dimensional outline for RM ferrite cores is shown in Figure 3-42. Dimensional data for RM ferrite cores is given in Table 3-42; design data is given in Table 3-43.

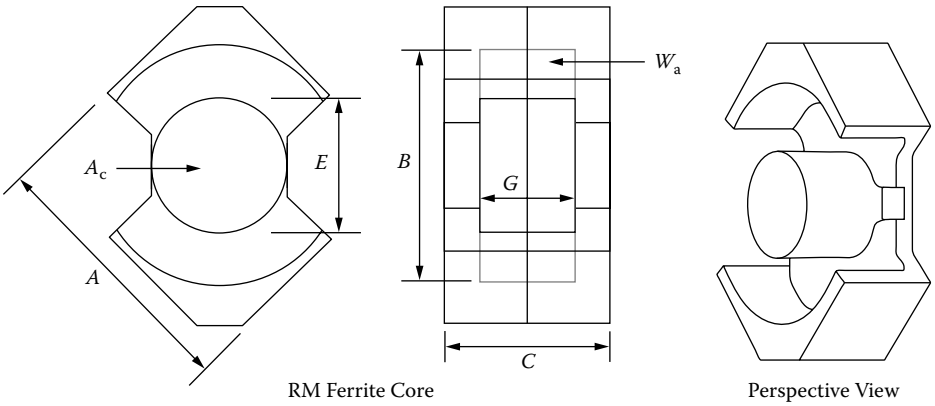

Figure 3-42. Dimension Outline for RM Ferrite Cores.

Table 3-42. Dimensional Data for RM Ferrite Cores

RM, Ferrite Cores (TDK)											
Part No.	A cm	B cm	C cm	E cm	G cm	Part No.	A cm	B cm	C cm	E cm	G cm
RM-4	0.963	0.815	1.04	0.38	0.72	RM-10	2.415	2.165	1.86	1.07	1.27
RM-5	1.205	1.04	1.04	0.48	0.65	RM-12	2.925	2.55	2.35	1.26	1.71
RM-6	1.44	1.265	1.24	0.63	0.82	RM-14	3.42	2.95	2.88	1.47	2.11
RM-8	1.935	1.73	1.64	0.84	1.1						

Table 3-43. Design Data for RM Ferrite Cores

RM, Ferrite Cores (TDK)											
Part No.	W_{tcu} grams	W_{tfe} grams	MLT cm	MPL cm	$\frac{W_a}{A_c}$	A_c cm^2	W_a cm^2	A_p cm^4	K_g cm^5	A_t cm^2	*AL mh/1K
RM-4	1.1	1.7	2.0	2.27	1.121	0.140	0.157	0.0220	0.0006	5.9	489
RM-5	1.6	3.0	2.5	2.24	0.768	0.237	0.182	0.0431	0.0016	7.9	869
RM-6	2.9	5.5	3.1	2.86	0.710	0.366	0.260	0.0952	0.0045	11.3	1130
RM-8	7.3	13.0	4.2	3.80	0.766	0.640	0.490	0.3136	0.0191	20.2	1233
RM-10	13.2	23.0	5.3	4.40	0.709	0.980	0.695	0.6811	0.0504	29.6	1833
RM-12	24.4	42.0	6.2	5.69	0.788	1.400	1.103	1.5442	0.1395	44.6	2434
RM-14	39.9	70.0	7.2	6.90	0.830	1.880	1.561	2.9347	0.3065	62.8	2869

* This AL value has been normalized for a permeability of 1K. For a close approximation of AL for other values of permeability, multiply this AL value by the new permeability in kilo-perm. If the new permeability is 2500, then use 2.5.

Downloaded By: 10.3.98.104 At: 00:06 16 Nov 2021; For: 9781439836880, chapter3, 10.1201/b10865-4

© 2011 by Taylor and Francis Group, LLC

Design and Dimensional Data for RM/(low profile), Ferrite Cores

Surface Mount Device, SMD

The RM/lp ferrite cores are a cut down version of the standard RM cores. The dimensional outline for RM/lp ferrite cores is shown in Figure 3-43. Dimensional data for RM/lp ferrite cores is given in Table 3-44; design data is given in Table 3-45.

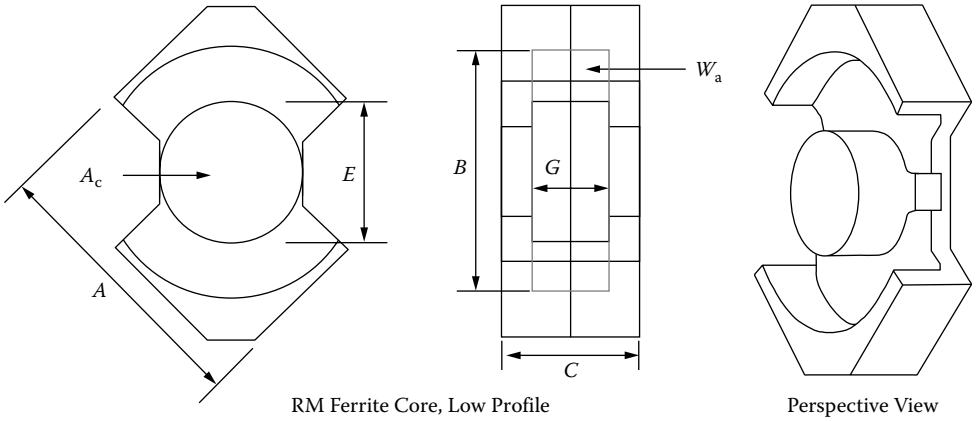

Figure 3-43. Dimension Outline for RM/lp Ferrite Cores.

Table 3-44. Dimensional Data for RM/lp Ferrite Cores

RM/lp, Ferrite Cores (Ferroxcube)											
Part No.	A cm	B cm	C cm	E cm	G cm	Part No.	A cm	B cm	C cm	E cm	G cm
RM4/ILP	0.980	0.795	0.780	0.390	0.430	RM8/ILP	1.970	1.700	1.160	0.855	0.590
RM5/ILP	1.230	1.020	0.780	0.490	0.360	RM10/ILP	2.470	2.120	1.300	1.090	0.670
RM6S/LP	1.470	1.240	0.900	0.640	0.450	RM12/ILP	2.980	2.500	1.680	1.280	0.900
RM7/ILP	1.720	1.475	0.980	0.725	0.470	RM14/ILP	3.470	2.900	2.050	1.500	1.110

Table 3-45. Design Data for RM/lp Ferrite Cores

RM/lp, Ferrite Cores (Ferroxcube)											
Part No.	W_{tcu} grams	W_{tfe} grams	MLT cm	MPL cm	W_a/A_c	A_c cm^2	W_a cm^2	A_p cm^4	K_g cm^5	A_t cm^2	*AL mh/1K
RM4/ILP	0.6	1.5	2.0	1.73	0.770	0.113	0.087	0.00983	0.00022	5.0	609
RM5/ILP	0.9	2.2	2.5	1.75	0.525	0.181	0.095	0.01720	0.00050	6.9	1022
RM6S/LP	1.5	4.2	3.1	2.18	0.433	0.312	0.135	0.04212	0.00170	9.6	1380
RM7/ILP	2.3	6.0	3.6	2.35	0.444	0.396	0.176	0.06970	0.00307	12.7	1587
RM8/ILP	3.7	10.0	4.2	2.87	0.449	0.554	0.249	0.13795	0.00728	16.9	1783
RM10/ILP	6.4	17.0	5.2	3.39	0.426	0.809	0.345	0.27911	0.01737	25.0	2435
RM12/ILP	11.9	34.0	6.1	4.20	0.439	1.250	0.549	0.68625	0.05625	37.8	3087
RM14/ILP	19.5	55.0	7.1	5.09	0.463	1.680	0.777	1.30536	0.12355	52.5	3652

* This AL value has been normalized for a permeability of 1K. For a close approximation of AL for other values of permeability, multiply this AL value by the new permeability in kilo-perm. If the new permeability is 2500, then use 2.5.

Downloaded By: 10.3.98.104 At: 00:06 16 Nov 2021; For: 9781439836880, chapter3, 10.1201/b10865-4

© 2011 by Taylor and Francis Group, LLC

Design and Dimensional Data for DS, Ferrite Cores

The DS ferrite cores are similar to standard Pot Cores. These cores have a large opening to bring out many strands of wire, which is convenient for high power and multiple outputs. The dimensional outline for DS ferrite cores is shown in Figure 3-44. Dimensional data for DS ferrite cores is given in Table 3-46; design data is given in Table 3-47.

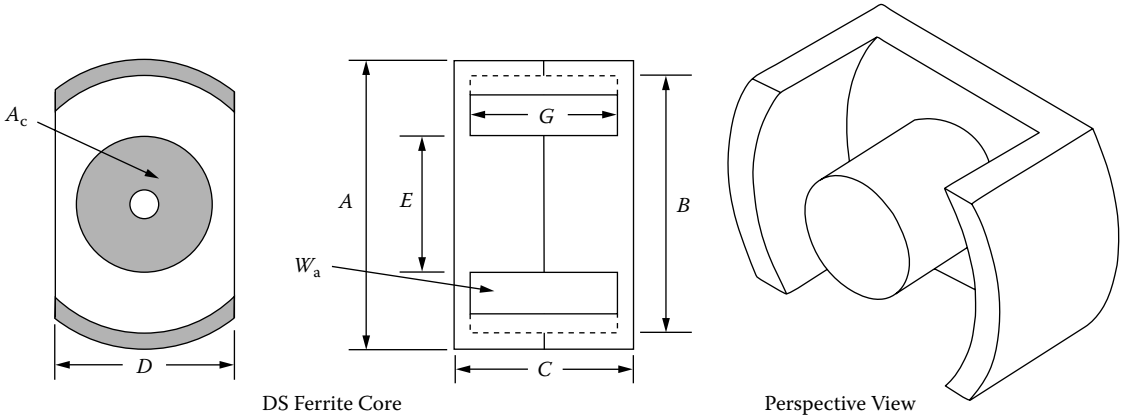

Figure 3-44. Dimension Outline for DS Ferrite Cores.

Table 3-46. Dimensional Data for DS Ferrite Cores

DS, Ferrite Cores (Magnetics)						
Part No.	A cm	B cm	C cm	D cm	E cm	G cm
DS-42311	2.286	1.793	1.108	1.524	0.990	0.726
DS-42318	2.286	1.793	1.800	1.524	0.990	1.386
DS-42616	2.550	2.121	1.610	1.709	1.148	1.102
DS-43019	3.000	2.500	1.880	2.032	1.351	1.300
DS-43622	3.561	2.990	2.170	2.385	1.610	1.458
DS-44229	4.240	3.561	2.960	2.840	1.770	2.042

Table 3-47. Design Data for DS Ferrite Cores

DS, Ferrite Cores (Magnetics)											
Part No.	W_{tcu} grams	W_{tfe} grams	MLT cm	MPL cm	$\frac{W_a}{A_c}$	A_c cm^2	W_a cm^2	A_p cm^4	K_g cm^5	A_t cm^2	*AL mh/1K
DS-42311	4.7	10.0	4.5	2.68	0.568	0.512	0.291	0.149	0.00678	16.2	1496
DS-42318	9.1	13.0	4.6	3.99	0.959	0.580	0.556	0.322	0.01626	21.1	1264
DS-42616	10.1	15.0	5.3	3.89	0.696	0.770	0.536	0.413	0.02398	23.1	1664
DS-43019	16.7	22.0	6.3	4.62	0.638	1.170	0.747	0.874	0.06492	31.9	1930
DS-43622	26.6	37.0	7.5	5.69	0.619	1.620	1.002	1.623	0.14025	44.2	2348
DS-44229	56.0	78.0	8.6	7.60	0.788	2.320	1.829	4.243	0.45788	67.7	2827

* This AL value has been normalized for a permeability of 1K. For a close approximation of AL for other values of permeability, multiply this AL value by the new permeability in kilo-perm. If the new permeability is 2500, then use 2.5.

Downloaded By: 10.3.98.104 At: 00:06 16 Nov 2021; For: 9781439836880, chapter3, 10.1201/b10865-4

© 2011 by Taylor and Francis Group, LLC

Design and Dimensional Data for UUR, Ferrite Cores

The UUR ferrite cores feature round legs with rather small cross sections. The round legs allow easy winding with either wire or foil. U cores are used for power, pulse and high-voltage transformers. The dimensional outline for UUR ferrite cores is shown in Figure 3-45. Dimensional data for UUR ferrite cores is given in Table 3-48; design data is given in Table 3-49.

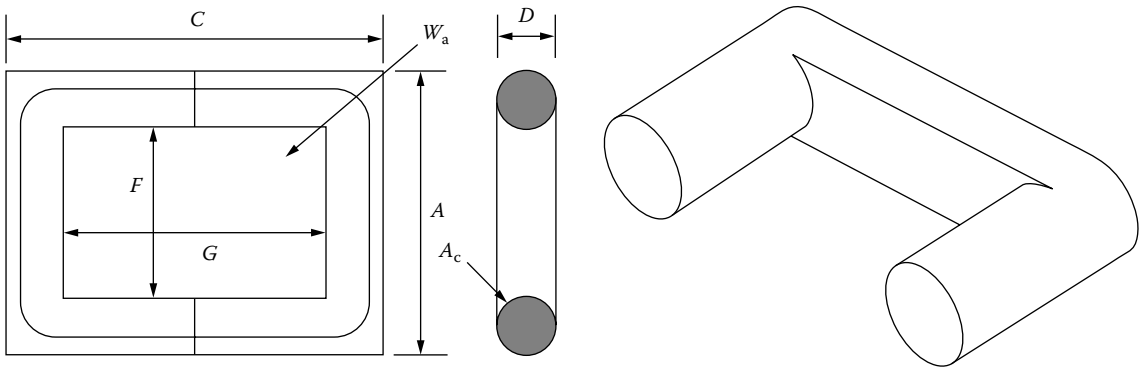

Figure 3-45. Dimension Outline for UUR Ferrite Cores.

Table 3-48. Dimensional Data for UUR Ferrite Cores

UUR, Ferrite Cores (Magnetics)					
Part No.	A cm	C cm	D cm	F cm	G cm
UUR-44121	4.178	5.080	1.194	1.880	3.180
UUR-44119	4.178	4.120	1.194	1.880	2.200
UUR-44125	4.178	5.080	1.194	1.880	3.180
UUR-44130	4.178	6.100	1.194	1.880	4.160

Table 3-49. Design Data for UUR Ferrite Cores

UUR, Ferrite Cores (Magnetics)											
Part No.	W_{tcu} grams	W_{tfe} grams	MLT cm	MPL cm	$\frac{W_a}{A_c}$	A_c cm^2	W_a cm^2	A_p cm^4	K_g cm^5	A_t cm^2	*AL mh/1K
UUR-44121	119.0	55.0	8.0	11.5	3.643	1.143	4.164	4.759	0.272	98.5	817
UUR-44119	146.2	54.0	8.0	12.1	5.619	0.911	5.119	4.663	0.212	102.9	707
UUR-44125	171.3	64.0	8.0	13.4	5.302	1.131	5.997	6.783	0.384	116.1	606
UUR-44130	227.0	75.0	8.0	15.5	7.095	1.120	7.946	8.900	0.498	134.9	609

* This AL value has been normalized for a permeability of 1K. For a close approximation of AL for other values of permeability, multiply this AL value by the new permeability in kilo-perm. If the new permeability is 2500, then use 2.5.

Downloaded By: 10.3.98.104 At: 00:06 16 Nov 2021; For: 9781439836880, chapter3, 10.1201/b10865-4

© 2011 by Taylor and Francis Group, LLC

Design and Dimensional Data for UUS, Ferrite Cores

The UUS ferrite cores feature square or rectangular legs. U cores are used for power, pulse and high-voltage transformers. The dimensional outline for UUS ferrite cores is shown in Figure 3-46. Dimensional data for UUS ferrite cores is given in Table 3-50; design data is given in Table 3-51.

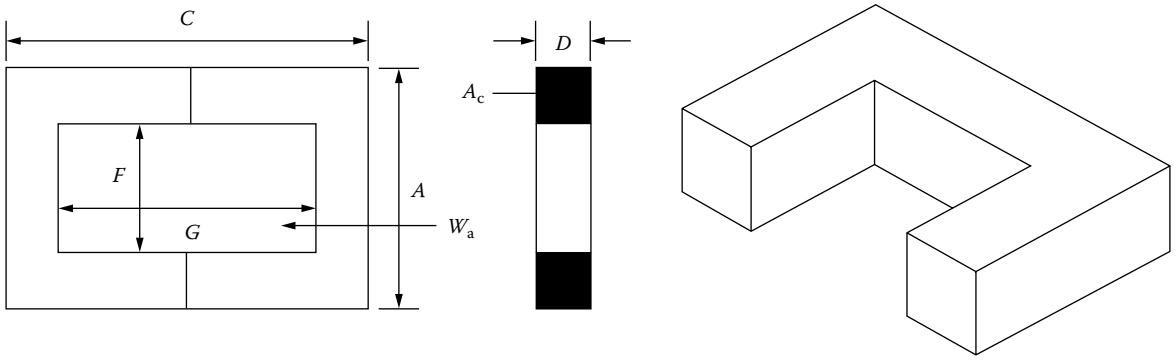

Figure 3-46. Dimension Outline for UUS Ferrite Cores.

Table 3-50. Dimensional Data for UUS Ferrite Cores

UUS, Ferrite Cores (Ferroxcube)					
Part No.	A cm	C cm	D cm	F cm	G cm
U10-08-03	1.000	1.640	0.290	0.435	1.000
U20-16-07	2.080	3.120	0.750	0.640	1.660
U25-20-13	2.480	3.920	1.270	0.840	2.280
U30-25-16	3.130	5.060	1.600	1.050	2.980
U67-27-14	6.730	5.400	1.430	3.880	2.540
U93-76-16	9.300	15.200	1.600	3.620	9.600

Table 3-51. Design Data for UUS Ferrite Cores

UUS, Ferrite Cores (Ferroxcube)											
Part No.	W_{tcu} grams	W_{tfe} grams	MLT cm	MPL cm	W_a/A_c	A_c cm^2	W_a cm^2	A_p cm^4	K_g cm^5	A_t cm^2	*AL mh/1K
U10-08-03	3.5	1.8	2.2	3.8	5.370	0.081	0.435	0.0352	0.000519	8.1	213
U20-16-07	16.4	19.0	4.4	6.8	1.896	0.560	1.062	0.5947	0.030277	29.5	826
U25-20-13	41.6	47.0	6.1	8.8	1.841	1.040	1.915	1.9916	0.135821	51.1	1261
U30-25-16	83.9	86.0	7.5	11.1	1.943	1.610	3.129	5.0377	0.432570	82.5	1609
U67-27-14	435.0	170.0	12.4	17.3	4.831	2.040	9.855	20.1042	1.322986	240.2	1652
U93-76-16	1875.2	800.0	15.2	35.4	7.757	4.480	34.752	155.6890	18.354909	605.3	1478

* This AL value has been normalized for a permeability of 1K. For a close approximation of AL for other values of permeability, multiply this AL value by the new permeability in kilo-perm. If the new permeability is 2500, then use 2.5.

Downloaded By: 10.3.98.104 At: 00:06 16 Nov 2021; For: 9781439836880, chapter3, 10.1201/b10865-4

© 2011 by Taylor and Francis Group, LLC

Design and Dimensional Data for Toroidal, Ferrite Cores

The toroidal ferrite core has the best possible shape from the magnetic point of view. The magnetic flux path is completely enclosed within the magnetic structure. The toroidal structure fully exploits the capabilities of a ferrite material. The dimensional outline for toroidal ferrite cores is shown in Figure 3-47. Dimensional data for toroidal ferrite cores is given in Table 3-52; design data is given in Table 3-53.

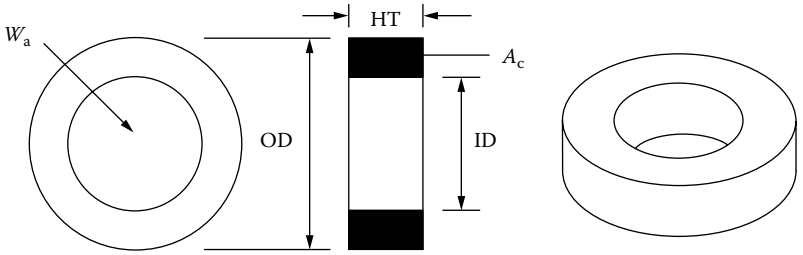

Figure 3-47. Dimension Outline for Toroidal Ferrite Cores.

Table 3-52. Dimensional Data for Toroidal Ferrite Cores

Toroidal, Ferrite Z Coated Cores (Magnetics)							
Part No.	OD cm	ID cm	HT cm	Part No.	OD cm	ID cm	HT cm
TC-40907	1.017	0.504	0.766	TC-42206	2.286	1.295	0.691
TC-41005	1.017	0.420	0.533	TC-42908	2.990	1.811	0.806
TC-41206	1.334	0.452	0.691	TC-43806	3.925	1.790	0.691
TC-41306	1.334	0.729	0.691	TC-43610	3.715	2.205	1.065
TC-41605	1.664	0.812	0.521	TC-43813	3.925	1.790	1.334
TC-42106	2.134	1.193	0.691	TC-48613	8.738	5.389	1.334

Table 3-53. Design Data for Toroidal Ferrite Cores

Toroidal, Ferrite Cores (Magnetics)											
Part No.	W_{tcu} grams	W_{tfe} grams	MLT cm	MPL cm	$\frac{W_a}{A_c}$	A_c cm^2	W_a cm^2	A_p cm^4	K_g cm^5	A_t cm^2	*AL mh/1K
TC-41005	0.8	1.2	1.7	2.07	1.220	0.109	0.133	0.014497	0.000372	5.3	661
TC-40907	1.4	1.6	2.0	2.27	1.401	0.137	0.192	0.026304	0.000721	6.6	754
TC-41206	1.2	3.3	2.2	2.50	0.727	0.220	0.160	0.035200	0.001408	8.6	1130
TC-41306	3.2	2.4	2.2	3.17	2.937	0.142	0.417	0.059214	0.001529	10.2	591
TC-41605	4.0	2.8	2.2	3.72	3.321	0.156	0.518	0.080808	0.002292	12.8	530
TC-42106	11.2	5.4	2.8	5.03	4.819	0.232	1.118	0.259376	0.008596	22.7	600
TC-42206	13.7	6.4	2.9	5.41	5.105	0.258	1.317	0.339786	0.012092	25.8	604
TC-42908	33.7	12.9	3.7	7.32	7.000	0.368	2.576	0.947968	0.037714	44.6	634
TC-43806	38.0	29.4	4.2	8.28	4.323	0.582	2.516	1.464312	0.081165	61.2	878
TC-43610	63.6	26.4	4.7	8.96	6.139	0.626	3.843	2.405718	0.128168	68.5	883
TC-43813	47.2	51.7	5.3	8.29	2.203	1.142	2.516	2.873272	0.247644	71.0	1674
TC-48613	740.1	203.0	9.1	21.50	12.068	1.890	22.809	43.109010	3.581364	348.0	1091

* This AL value has been normalized for a permeability of 1K. For a close approximation of AL for other values of permeability, multiply this AL value by the new permeability in kilo-perm. If the new permeability is 2500, then use 2.5.

Downloaded By: 10.3.98.104 At: 00:06 16 Nov 2021; For: 9781439836880, chapter3, 10.1201/b10865-4

© 2011 by Taylor and Francis Group, LLC

Design and Dimensional Data for Toroidal, MPP Powder Cores

The dimensional outline for MPP powder cores is shown in Figure 3-48. Dimensional data for MPP powder cores is given in Table 3-54; design data is given in Table 3-55. See Chapter 2 for more information.

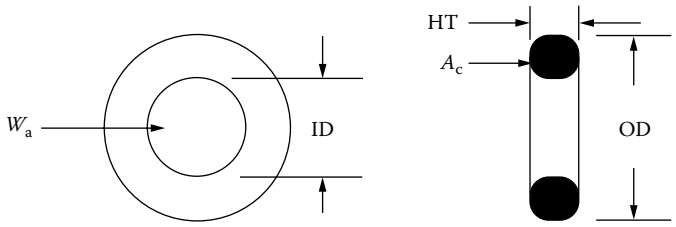

Figure 3-48. Dimension Outline for Toroidal MPP Powder Cores.

Table 3-54. Dimensional Data for Toroidal MPP Powder Cores

MPP Powder Cores, Magnetics 60 mu (coated)											
Part No.	OD cm	ID cm	HT cm	Part No.	OD cm	ID cm	HT cm	Part No.	OD cm	ID cm	HT cm
55021	0.699	0.229	0.343	55381	1.803	0.902	0.711	55076	3.670	2.150	1.135
55281	1.029	0.427	0.381	55848	2.110	1.207	0.711	55083	4.080	2.330	1.537
55291	1.029	0.427	0.460	55059	2.360	1.334	0.838	55439	4.760	2.330	1.892
55041	1.080	0.457	0.460	55351	2.430	1.377	0.965	55090	4.760	2.790	1.613
55131	1.181	0.584	0.460	55894	2.770	1.410	1.194	55716	5.170	3.090	1.435
55051	1.346	0.699	0.551	55071	3.380	1.930	1.143	55110	5.800	3.470	1.486
55121	1.740	0.953	0.711	55586	3.520	2.260	0.978				

Table 3-55. Design Data for Toroidal MPP Powder Cores

MPP Powder Cores, Magnetics 60 mu (coated)											
Part No.	W_{tcu} grams	W_{tfe} grams	MLT cm	MPL cm	$\frac{W_a}{A_c}$	A_c cm^2	W_a cm^2	A_p cm^4	K_g cm^5	A_t cm^2	AL mh/1K
55021	0.10	0.553	1.10	1.36	0.723	0.047	0.034	0.001598	0.000027	2.30	24
55281	0.70	1.307	1.40	2.18	1.729	0.075	0.130	0.009776	0.000210	4.80	25
55291	0.70	1.645	1.60	2.18	1.376	0.095	0.130	0.012285	0.000290	5.10	32
55041	0.90	1.795	1.60	2.38	1.500	0.100	0.150	0.015000	0.000375	5.60	32
55131	1.50	1.993	1.70	2.69	2.759	0.091	0.250	0.022650	0.000483	6.90	26
55051	2.50	2.886	2.00	3.12	3.175	0.114	0.362	0.041268	0.000941	9.30	27
55121	6.10	6.373	2.50	4.11	3.563	0.192	0.684	0.131328	0.004034	16.00	35
55381	5.60	7.670	2.60	4.14	2.634	0.232	0.611	0.141752	0.005059	16.30	43
55848	11.10	8.836	2.80	5.09	4.898	0.226	1.107	0.250182	0.008077	22.70	32
55059	15.20	14.993	3.20	5.67	4.097	0.331	1.356	0.448836	0.018571	28.60	43
55351	17.90	18.706	3.50	5.88	3.727	0.388	1.446	0.561048	0.024878	31.40	51
55894	22.30	33.652	4.10	6.35	2.320	0.654	1.517	0.992118	0.063302	39.80	75
55071	46.20	44.086	4.50	8.15	4.263	0.672	2.865	1.925280	0.115003	58.30	61
55586	61.40	34.900	4.40	8.95	8.681	0.454	3.941	1.789214	0.073846	64.40	38
55076	60.20	48.692	4.80	8.98	5.255	0.678	3.563	2.415714	0.136488	68.00	56
55083	85.30	86.198	5.70	9.84	3.910	1.072	4.191	4.492752	0.337981	87.50	81
55439	101.90	170.140	6.80	10.74	2.106	1.990	4.191	8.340090	0.976281	112.60	135
55090	136.90	122.576	6.40	11.63	4.497	1.340	6.026	8.074840	0.676268	117.20	86
55716	169.30	132.540	6.40	12.73	5.917	1.251	7.402	9.259902	0.724009	133.10	73
55110	233.30	164.500	7.00	14.300	6.474	1.444	9.348	13.498512	1.113820	164.70	75

Downloaded By: 10.3.98.104 At: 00:06 16 Nov 2021; For: 9781439836880, chapter3, 10.1201/b10865-4

© 2011 by Taylor and Francis Group, LLC

Design and Dimensional Data for Toroidal, Iron Powder Cores

The dimensional outline for Iron powder cores is shown in Figure 3-49. Dimensional data for Iron powder cores is given in Table 3-56; design data is given in Table 3-57. See Chapter 2 for more information.

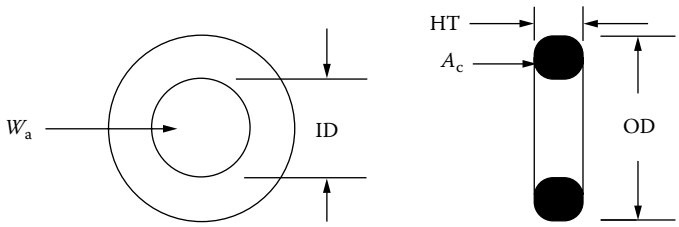

Figure 3-49. Dimension Outline for Toroidal Iron Powder Cores.

Table 3-56. Dimensional Data for Toroidal Iron Powder Cores

Iron Powder Cores, Micrometals 75 mu (coated)											
Part No.	OD cm	ID cm	HT cm	Part No.	OD cm	ID cm	HT cm	Part No.	OD cm	ID cm	HT cm
T20-26	0.508	0.224	0.178	T50-26	1.270	0.770	0.483	T130-26	3.300	1.980	1.110
T25-26	0.648	0.305	0.244	T60-26	1.520	0.853	0.594	T132-26	3.300	1.780	1.110
T26-26	0.673	0.267	0.483	T68-26	1.750	0.940	0.483	T131-26	3.300	1.630	1.110
T30-26	0.780	0.384	0.325	T80-26	2.020	1.260	0.635	T141-26	3.590	2.240	1.050
T37-26	0.953	0.521	0.325	T94-26	2.390	1.420	0.792	T150-26	3.840	2.150	1.110
T38-26	0.953	0.445	0.483	T90-26	2.290	1.400	0.953	T175-26	4.450	2.720	1.650
T44-26	1.120	0.582	0.404	T106-26	2.690	1.450	1.110				

Table 3-57. Design Data for Toroidal Iron Powder Cores

Iron Powder Cores, Micrometals 75 mu (coated)											
Part No.	W_{tcu} grams	W_{tfe} grams	MLT cm	MPL cm	$\frac{W_a}{A_c}$	A_c cm^2	W_a cm^2	A_p cm^4	K_g cm^5	A_t cm^2	AL mh/1K
T20-26	0.10	0.19	0.70	1.15	1.713	0.023	0.039	0.000906	0.000012	1.2	18.5
T25-26	0.24	0.39	0.90	1.50	1.973	0.037	0.073	0.002701	0.000044	2.0	24.5
T26-26	0.26	0.93	1.30	1.47	0.644	0.090	0.058	0.005220	0.000145	2.6	57
T30-26	0.47	0.77	1.14	1.84	1.933	0.060	0.116	0.006960	0.000147	3.1	33.5
T37-26	0.97	1.04	1.28	2.31	3.328	0.064	0.213	0.013632	0.000273	4.5	28.5
T38-26	0.85	1.74	1.50	2.18	1.360	0.114	0.155	0.017670	0.000537	4.8	49
T44-26	1.46	1.86	1.50	2.68	2.687	0.099	0.266	0.026334	0.000695	6.2	37
T50-26	2.96	2.50	1.80	3.19	4.071	0.112	0.456	0.051072	0.001271	8.8	33
T60-26	4.40	4.89	2.20	3.74	3.053	0.187	0.571	0.106777	0.003630	12.2	50
T68-26	5.36	5.30	2.17	4.23	3.877	0.179	0.694	0.124226	0.004099	14.4	43.5
T80-26	11.66	8.31	2.63	5.14	5.394	0.231	1.246	0.287826	0.010112	21.4	46
T94-26	17.44	15.13	3.10	5.97	4.373	0.362	1.583	0.573046	0.026767	29.6	60
T90-26	18.37	15.98	3.40	5.78	3.894	0.395	1.538	0.607510	0.028231	29.4	70
T106-26	23.05	29.94	3.93	6.49	2.504	0.659	1.650	1.087350	0.072970	38.0	93
T130-26	48.33	40.46	4.40	8.28	4.408	0.698	3.077	2.147746	0.136284	56.9	81
T132-26	39.05	44.85	4.40	7.96	3.089	0.805	2.487	2.002035	0.146513	53.9	103
T131-26	32.75	47.83	4.40	7.72	2.357	0.885	2.086	1.845818	0.148504	51.7	116
T141-26	62.70	45.70	4.60	9.14	5.743	0.674	3.871	2.609054	0.152913	66.6	75
T150-26	62.55	58.24	4.85	9.38	4.091	0.887	3.629	3.218923	0.235479	71.6	96
T175-26	128.04	105.05	6.20	11.20	4.334	1.340	5.808	7.782318	0.672794	107.4	105

Downloaded By: 10.3.98.104 At: 00:06 16 Nov 2021; For: 9781439836880, chapter3, 10.1201/b10865-4

© 2011 by Taylor and Francis Group, LLC

Design and Dimensional Data for Toroidal, Sendust Powder Cores

The dimensional outline for Sendust powder cores is shown in Figure 3-50. Dimensional data for Sendust powder cores is given in Table 3-58; design data is given in Table 3-59. See Chapter 2 for more information.

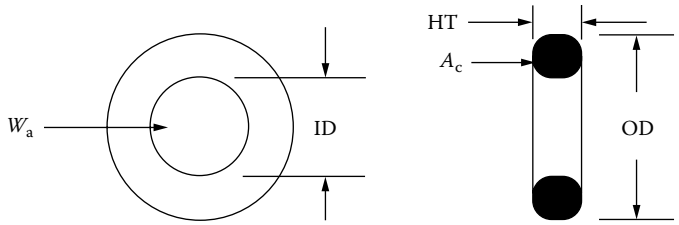

Figure 3-50. Dimension Outline for Toroidal Sendust Powder Cores.

Table 3-58. Dimensional Data for Toroidal Sendust Powder Cores

Sendust Powder Cores, Magnetics 60 mu (coated)											
Part No.	OD cm	ID cm	HT cm	Part No.	OD cm	ID cm	HT cm	Part No.	OD cm	ID cm	HT cm
77021	0.699	0.229	0.343	77381	1.803	0.902	0.711	77076	3.670	2.150	1.135
77281	1.029	0.427	0.381	77848	2.110	1.207	0.711	77083	4.080	2.330	1.537
77291	1.029	0.427	0.460	77059	2.360	1.334	0.838	77439	4.760	2.330	1.892
77041	1.080	0.457	0.460	77351	2.430	1.377	0.965	77090	4.760	2.790	1.613
77131	1.181	0.584	0.460	77894	2.770	1.410	1.194	77716	5.170	3.090	1.435
77051	1.346	0.699	0.551	77071	3.380	1.930	1.143	77110	5.800	3.470	1.486
77121	1.740	0.953	0.711	77586	3.520	2.260	0.978				

Table 3-59. Design Data for Toroidal Sendust Powder Cores

Sendust Powder Cores, Magnetics 60 mu (coated)											
Part No.	W_{tcu} grams	W_{tfe} grams	MLT cm	MPL cm	W_a / A_c	A_c cm^2	W_a cm^2	A_p cm^4	K_g cm^5	A_t cm^2	AL mh/1K
77021	0.10	0.448	1.10	1.36	0.723	0.047	0.034	0.001598	0.000027	2.30	24
77281	0.70	1.148	1.40	2.18	1.729	0.075	0.130	0.009776	0.000210	4.80	25
77291	0.70	1.442	1.60	2.18	1.376	0.095	0.130	0.012285	0.000290	5.10	32
77041	0.90	1.666	1.60	2.38	1.500	0.100	0.150	0.015000	0.000375	5.60	32
77131	1.50	1.706	1.70	2.69	2.759	0.091	0.250	0.022650	0.000483	6.90	26
77051	2.50	2.490	2.00	3.12	3.175	0.114	0.362	0.041268	0.000941	9.30	27
77121	6.10	5.524	2.50	4.11	3.563	0.192	0.684	0.131328	0.004034	16.00	35
77381	5.60	6.723	2.60	4.14	2.634	0.232	0.611	0.141752	0.005059	16.30	43
77848	11.10	8.052	2.80	5.09	4.898	0.226	1.107	0.250182	0.008077	22.70	32
77059	15.20	13.137	3.20	5.67	4.097	0.331	1.356	0.448836	0.018571	28.60	43
77351	17.90	15.970	3.50	5.88	3.727	0.388	1.446	0.561048	0.024878	31.40	51
77894	22.30	29.070	4.10	6.35	2.320	0.654	1.517	0.992118	0.063302	39.80	75
77071	46.20	38.338	4.50	8.15	4.263	0.672	2.865	1.925280	0.115003	58.30	61
77586	61.40	28.443	4.40	8.95	8.681	0.454	3.941	1.789214	0.073846	64.40	38
77076	60.20	42.619	4.80	8.98	5.255	0.678	3.563	2.415714	0.136488	68.00	56
77083	85.30	73.839	5.70	9.84	3.910	1.072	4.191	4.492752	0.337981	87.50	81
77439	101.90	149.608	6.80	10.74	2.106	1.990	4.191	8.340090	0.976281	112.60	135
77090	136.90	109.089	6.40	11.63	4.497	1.340	6.026	8.074840	0.676268	117.20	86
77716	169.30	111.477	6.40	12.73	5.917	1.251	7.402	9.259902	0.724009	133.10	73
77110	233.30	144.544	7.00	14.300	6.474	1.444	9.348	13.498512	1.113820	164.70	75

Downloaded By: 10.3.98.104 At: 00:06 16 Nov 2021; For: 9781439836880, chapter3, 10.1201/b10865-4

© 2011 by Taylor and Francis Group, LLC

Design and Dimensional Data for Toroidal, High Flux Powder Cores

The dimensional outline for High Flux powder cores is shown in Figure 3-51. Dimensional data for High Flux powder cores is given in Table 3-60; design data is given in Table 3-61. See Chapter 2 for more information.

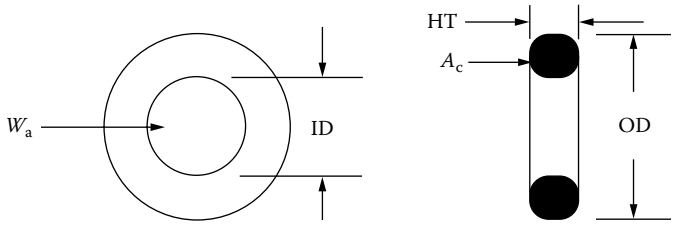

Figure 3-51. Dimension Outline for Toroidal High Flux Powder Cores.

Table 3-60. Dimensional Data for Toroidal High Flux Powder Cores

High Flux Powder Cores, Magnetics 60 mu (coated)											
Part No.	OD cm	ID cm	HT cm	Part No.	OD cm	ID cm	HT cm	Part No.	OD cm	ID cm	HT cm
58021	0.699	0.229	0.343	58381	1.803	0.902	0.711	58076	3.670	2.150	1.135
58281	1.029	0.427	0.381	58848	2.110	1.207	0.711	58083	4.080	2.330	1.537
58291	1.029	0.427	0.460	58059	2.360	1.334	0.838	58439	4.760	2.330	1.892
58041	1.080	0.457	0.460	58351	2.430	1.377	0.965	58090	4.760	2.790	1.613
58131	1.181	0.584	0.460	58894	2.770	1.410	1.194	58716	5.170	3.090	1.435
58051	1.346	0.699	0.551	58071	3.380	1.930	1.143	58110	5.800	3.470	1.486
58121	1.740	0.953	0.711	58586	3.520	2.260	0.978				

Table 3-61. Design Data for Toroidal High Flux Powder Cores

High Flux Powder Cores, Magnetics 60 mu (coated)											
Part No.	W_{tcu} grams	W_{tfe} grams	MLT cm	MPL cm	$\frac{W_a}{A_c}$	A_c cm^2	W_a cm^2	A_p cm^4	K_g cm^5	A_t cm^2	AL mh/1K
58021	0.10	0.519	1.10	1.36	0.723	0.047	0.034	0.001598	0.000027	2.30	24
58281	0.70	1.222	1.40	2.18	1.729	0.075	0.130	0.009776	0.000210	4.80	25
58291	0.70	1.598	1.60	2.18	1.376	0.095	0.130	0.012285	0.000290	5.10	32
58041	0.90	1.692	1.60	2.38	1.500	0.100	0.150	0.015000	0.000375	5.60	32
58131	1.50	1.870	1.70	2.69	2.759	0.091	0.250	0.022650	0.000483	6.90	26
58051	2.50	2.726	2.00	3.12	3.175	0.114	0.362	0.041268	0.000941	9.30	27
58121	6.10	5.960	2.50	4.11	3.563	0.192	0.684	0.131328	0.004034	16.00	35
58381	5.60	7.238	2.60	4.14	2.634	0.232	0.611	0.141752	0.005059	16.30	43
58848	11.10	8.366	2.80	5.09	4.898	0.226	1.107	0.250182	0.008077	22.70	32
58059	15.20	14.100	3.20	5.67	4.097	0.331	1.356	0.448836	0.018571	28.60	43
58351	17.90	17.672	3.50	5.88	3.727	0.388	1.446	0.561048	0.024878	31.40	51
58894	22.30	31.772	4.10	6.35	2.320	0.654	1.517	0.992118	0.063302	39.80	75
58071	46.20	41.548	4.50	8.15	4.263	0.672	2.865	1.925280	0.115003	58.30	61
58586	61.40	30.926	4.40	8.95	8.681	0.454	3.941	1.789214	0.073846	64.40	38
58076	60.20	45.966	4.80	8.98	5.255	0.678	3.563	2.415714	0.136488	68.00	56
58083	85.30	81.310	5.70	9.84	3.910	1.072	4.191	4.492752	0.337981	87.50	81
58439	101.90	160.740	6.80	10.74	2.106	1.990	4.191	8.340090	0.976281	112.60	135
58090	136.90	115.620	6.40	11.63	4.497	1.340	6.026	8.074840	0.676268	117.20	86
58716	169.30	125.020	6.40	12.73	5.917	1.251	7.402	9.259902	0.724009	133.10	73
58110	233.30	155.100	7.00	14.300	6.474	1.444	9.348	13.498512	1.113820	164.70	75

Downloaded By: 10.3.98.104 At: 00:06 16 Nov 2021; For: 9781439836880, chapter3, 10.1201/b10865-4

© 2011 by Taylor and Francis Group, LLC

Design and Dimensional Data for EE, Iron Powder Cores

The dimensional outline for EE iron powder cores is shown in Figure 3-52. Dimensional data for EE iron powder cores is given in Table 3-62; design data is given in Table 3-63. See Chapter 2 for more information.

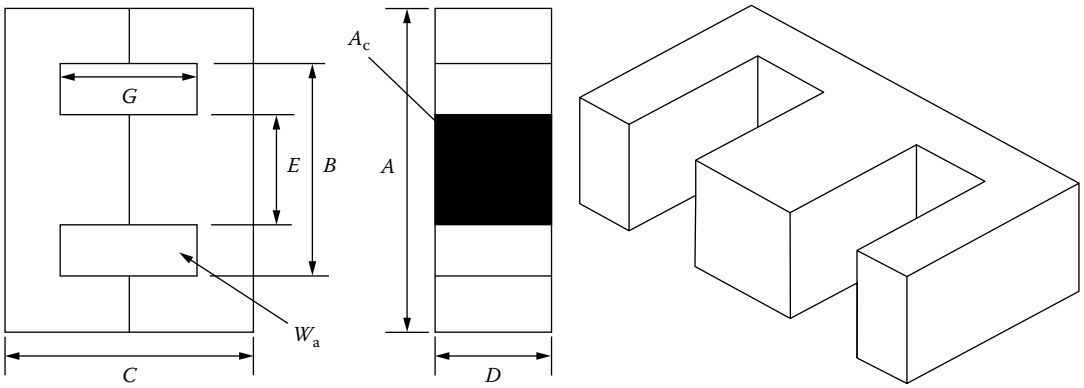

Figure 3-52. Dimension Outline for EE Iron Powder Cores.

Table 3-62. Dimensional Data for EE Iron Powder Cores

EE, Iron Powder Cores (Micrometals) 75 mu Mix-26													
Part No.	A cm	B cm	C cm	D cm	E cm	G cm	Part No.	A cm	B cm	C cm	D cm	E cm	G cm
DIN-16-5	1.640	1.130	1.630	0.462	0.462	1.200	DIN-42-15	4.280	3.070	4.220	1.500	1.200	3.070
EI-187	1.910	1.430	1.610	0.475	0.475	1.160	DIN-42-20	4.280	3.070	4.220	2.000	1.200	3.070
EE-24-25	2.540	1.910	1.910	0.635	0.635	1.270	EI-625	4.740	3.180	3.940	1.570	1.570	2.420
EI-375	3.490	2.540	2.910	0.953	0.953	1.960	DIN-55-21	5.610	3.860	5.540	2.080	1.730	3.830
EI-21	4.130	2.860	3.410	1.270	1.270	2.140	EI-75	5.690	3.810	4.760	1.890	1.890	2.900

Table 3-63. Design Data for EE Iron Powder Cores

EE, Iron Powder Cores (Micrometals) 75 mu Mix-26											
Part No.	W_{tcu} grams	W_{tfe} grams	MLT cm	MPL cm	$\frac{W_a}{A_c}$	A_c cm^2	W_a cm^2	A_p cm^4	K_g cm^5	A_t cm^2	AL mh/1K
DIN-16-5	4.7	5.3	3.3	3.98	1.790	0.224	0.401	0.090	0.00243	11.5	58
EI-187	7.5	5.5	3.8	4.10	2.451	0.226	0.554	0.125	0.00298	14.4	64
E1-24-25	14.3	12.2	5.0	5.10	2.010	0.403	0.810	0.326	0.01052	23.5	92
EI-375	37.1	40.1	6.7	7.40	1.714	0.907	1.555	1.410	0.07637	46.8	134
EI-21	50.2	80.8	8.2	8.40	1.071	1.610	1.725	2.777	0.21812	63.3	210
DIN-42-15	91.3	112.4	8.9	10.40	1.586	1.810	2.870	5.195	0.42258	84.4	195
DIN-42-20	101.5	149.6	9.9	10.40	1.191	2.410	2.870	6.917	0.67350	92.9	232
EI-625	65.2	141.1	9.4	9.5	0.785	2.480	1.948	4.831	0.50983	82.4	265
DIN-55-21	167.9	283.7	11.6	13.2	1.133	3.600	4.079	14.684	1.82289	141.3	275
EI-75	110.7	245.8	11.2	11.5	0.778	3.580	2.784	9.967	1.27432	119.3	325

Downloaded By: 10.3.98.104 At: 00:06 16 Nov 2021; For: 9781439836880, chapter3, 10.1201/b10865-4

© 2011 by Taylor and Francis Group, LLC

Design and Dimensional Data for EE, Sendust Powder Cores

The dimensional outline for EE Sendust cores is shown in Figure 3-53. Dimensional data for EE Sendust powder cores is given in Table 3-64; design data is given in Table 3-65. See Chapter 2 for more information.

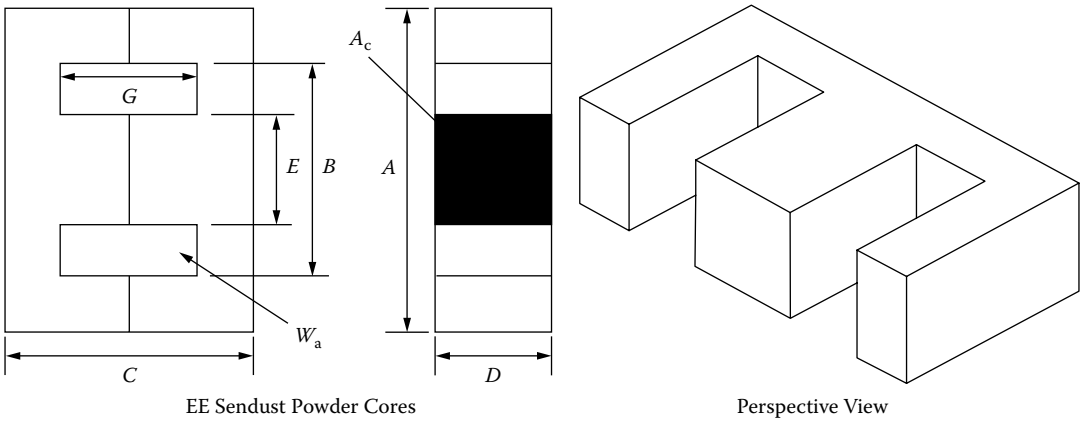

Figure 3-53. Dimension Outline for EE Sendust Powder Cores.

Table 3-64. Dimensional Data for EE Sendust Powder Cores

EE, Sendust Powder Cores (Magnetics) 60 mu													
Part No.	A cm	B cm	C cm	D cm	E cm	G cm	Part No.	A cm	B cm	C cm	D cm	E cm	G cm
EI-187	1.910	1.430	1.610	0.475	0.475	1.160	DIN-42-15	4.280	3.070	4.220	1.500	1.200	3.070
EE-24-25	2.540	1.910	1.910	0.635	0.635	1.270	DIN-42-20	4.280	3.070	4.220	2.000	1.200	3.070
EI-375	3.490	2.540	2.910	0.953	0.953	1.960	DIN-55-21	5.610	3.860	5.540	2.080	1.730	3.830
EI-21	4.130	2.860	3.410	1.270	1.270	2.140							

Table 3-65. Design Data for EE Sendust Powder Cores

EE, Sendust Powder Cores (Magnetics) 60 mu											
Part No.	W_{tcu} grams	W_{tfe} grams	MLT cm	MPL cm	W_a/A_c	A_c cm^2	W_a cm^2	A_p cm^4	K_g cm^5	A_t cm^2	AL mh/1K
EI-187	7.5	6.4	3.8	4.01	2.451	0.226	0.554	0.125	0.00298	14.4	48
E1-24-25	14.3	13.1	5.0	4.85	2.010	0.403	0.810	0.326	0.01052	23.5	70
EI-375	37.1	40.8	6.7	6.94	1.714	0.907	1.555	1.410	0.07637	46.8	102
EI-21	50.2	82.6	8.2	7.75	1.071	1.610	1.725	2.777	0.21812	63.3	163
DIN-42-15	91.3	126.0	8.9	9.84	1.586	1.810	2.870	5.195	0.42258	84.4	150
DIN-42-20	101.5	163.0	9.9	9.84	1.191	2.410	2.870	6.917	0.67350	92.9	194
DIN-55-21	167.9	302.0	11.6	12.3	1.133	3.600	4.079	14.684	1.82289	141.3	219

Downloaded By: 10.3.98.104 At: 00:06 16 Nov 2021; For: 9781439836880, chapter3, 10.1201/b10865-4

© 2011 by Taylor and Francis Group, LLC

Manufacturers' Material Product List

Table 3-66 has been put together to show a product list of the leading manufacturers for ferrites, powder cores, nickel-iron tape cores, amorphous tape cores, and laminations. Listed in the references are the manufacturers and their web-page address.

Table 3-66

Manufacturers Material Product List				
Ferrites Cores				
Manufacturers	Mn-Zn	Ni-Zn	Special Machining	
Ferroxcube	X			
TDK	X			
Magnetics	X		X	
EPCOS, Inc.	X			
TSC Ferrite Int.	X			
Fair-Rite	X	X	X	
MMG	X	X		
Ceramic Magnetics, Inc.	X	X	X	
Powder Cores				
Manufacturers	MPP	Hi-Flux	Sendust	Iron Powder
Magnetics	X	X	X	X
Micrometals	X	X	X	X
MMG	X	X	X	X
Tape Toroids and C Cores				
Manufacturers	Silicon	Supermendur	50-50 NiFe	80-20 NiFe
Magnetics	X	X	X	X
Magnetic Metals	X	X	X	X
Electro-Core, Inc.	X			
Amorphous Tape Toroids and C Cores				
Manufacturers	2605SC	2714A	Nanocrystalline	Special
Magnetic Metals	X	X	X	
Metglas	X	X		
VAC	X	X	X	
MK Magnetics, Inc.	X	X	X	Only
Laminations				
Manufacturers	Silicon	Supermendur	50-50 NiFe	80-20 NiFe
Thomas & Skinner, Inc.	X			
Magnetic Metals	X	X	X	X
Tempel Steel Co.	X			

Downloaded By: 10.3.98.104 At: 00:06 16 Nov 2021; For: 9781439836880, chapter3, 10.1201/b10865-4

© 2011 by Taylor and Francis Group, LLC

References

Ceramic Magnetics, Inc. www.cmi-ferrite.com

Electro-Core Inc. www.electro-core.com

EPCOS www.usa.epcos.com

Fair Rite www.fair-rite.com

Ferroxcube www.ferroxcube.com

Magnetics www.mag-inc.com

Magnetic Metals Corp. www.magmet.com

Metglas www.metglas.com

Micrometals www.micrometals.com

MK Magnetics www.mkmagnetics.com

MMG www.mmgca.com

TDK www.tdk.com

Tempel Steel Co. www.tempel.com

Thomas and Skinner, Inc. www.thomas-skinner.com

TSC Ferrite International www.tscinternational.com

VAC www.vaccorp.com

Downloaded By: 10.3.98.104 At: 00:06 16 Nov 2021; For: 9781439836880, chapter3, 10.1201/b10865-4

© 2011 by Taylor and Francis Group, LLC